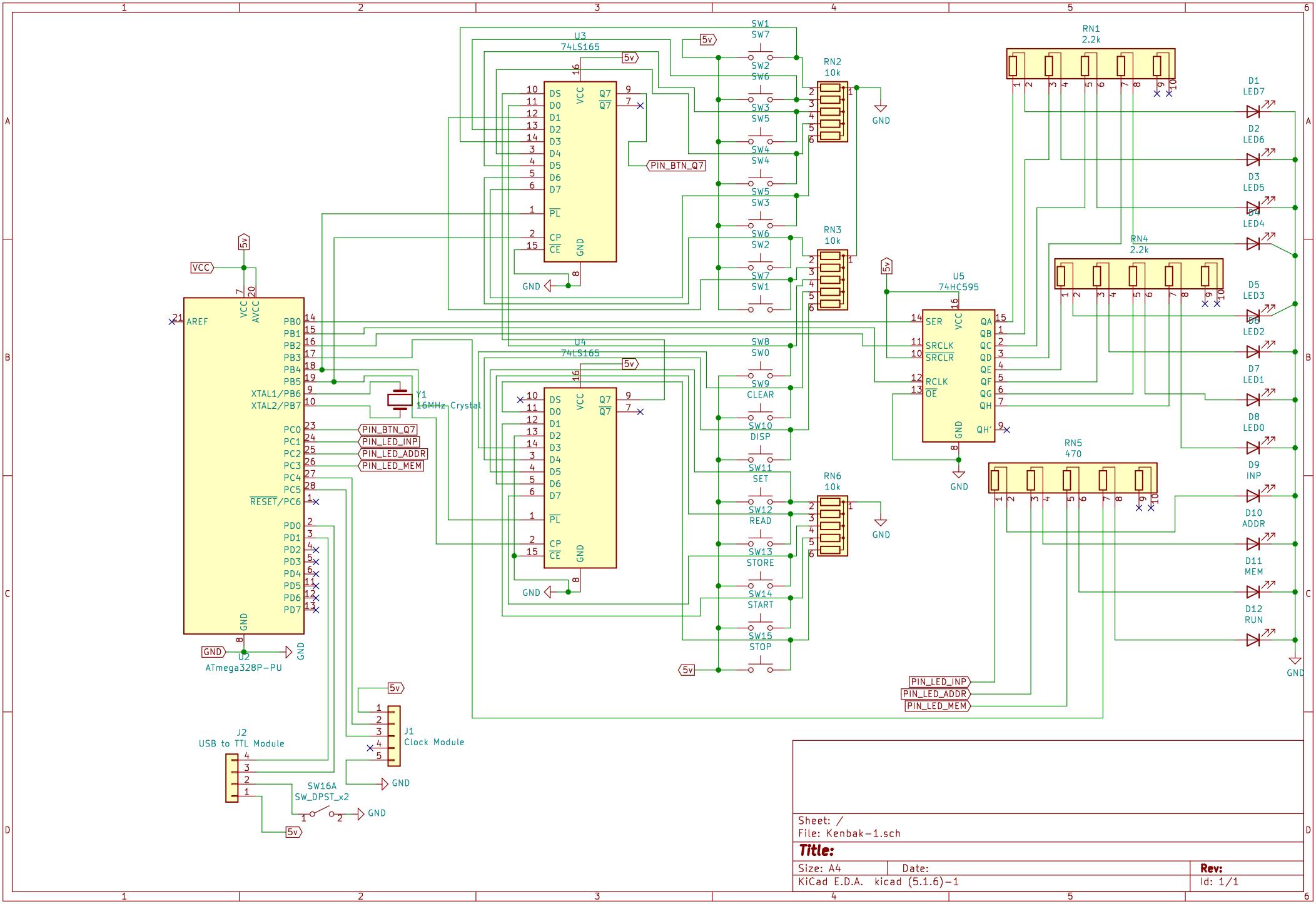


Sheet: /
File: Kenbak-1.sch

**Title:**

| | | |
|---|---|---|
| Size: A4 | Date: | **Rev:** |
| KiCad E.D.A. kicad (5.1.6)-1 | | Id: 1/1 |