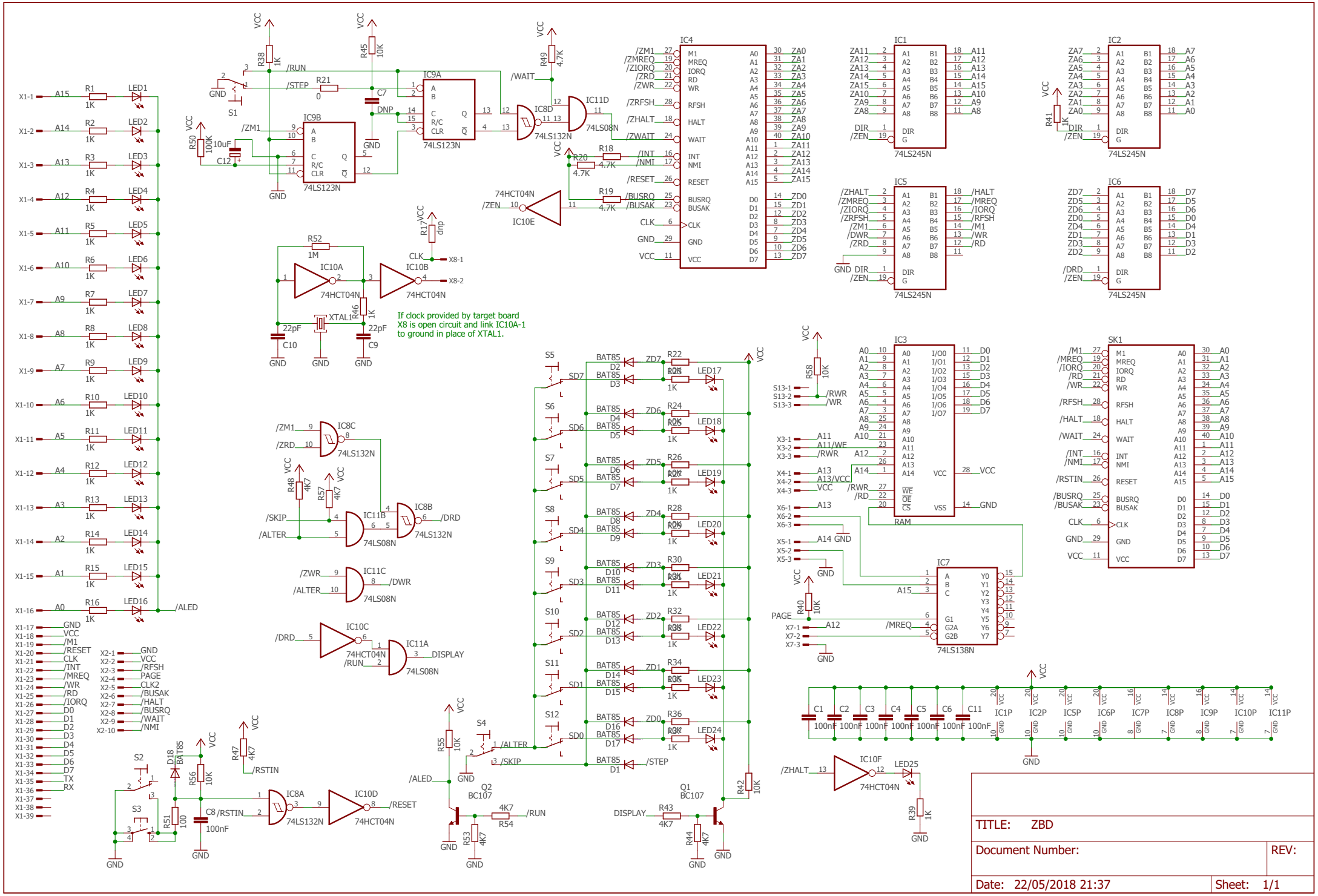
IC4
IC1
IC2
IC5
IC6
IC3
SK1
IC7
IC9A
IC9B
IC8A
IC8B
IC8C
IC8D
IC10A
IC10B
IC10C
IC10D
IC10E
IC10F
IC11A
IC11B
IC11C
IC11D
If clock provided by target board
X8 is open circuit and link IC10A-1
to ground in place of XTAL1.
TITLE: ZBD
Document Number:
REV:
Date: 22/05/2018 21:37
Sheet: 1/1