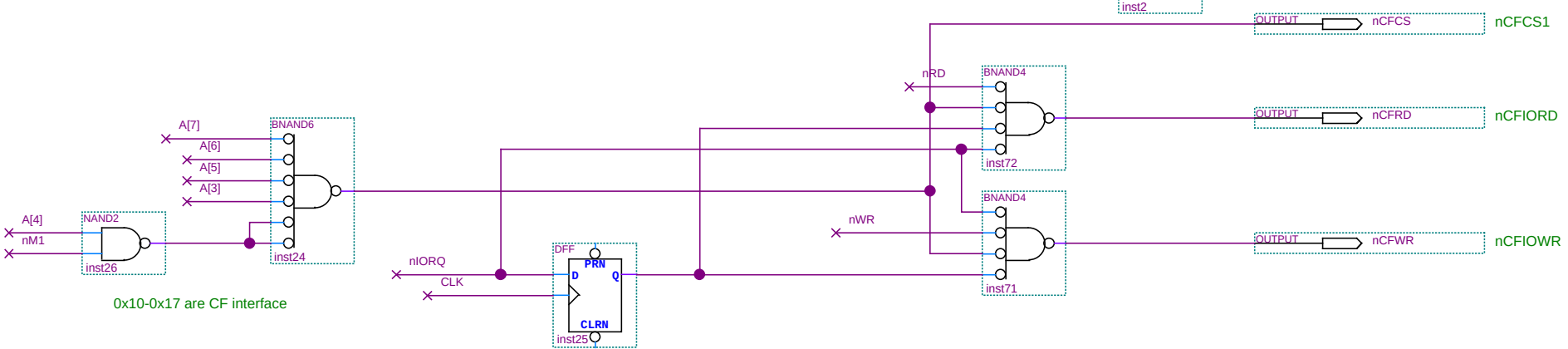
inst2
OUTPUT
nCFCS
nCFCS1
nRD
BNAND4
inst72
OUTPUT
nCFRD
nCFIORD
A[7]
A[6]
A[5]
A[3]
BNAND6
inst24
A[4]
nM1
NAND2
inst26
nWR
BNAND4
inst71
OUTPUT
nCFWR
nCFIOWR
nIORQ
CLK
DFF
PRN
D
Q
CLRN
inst25
0x10-0x17 are CF interface