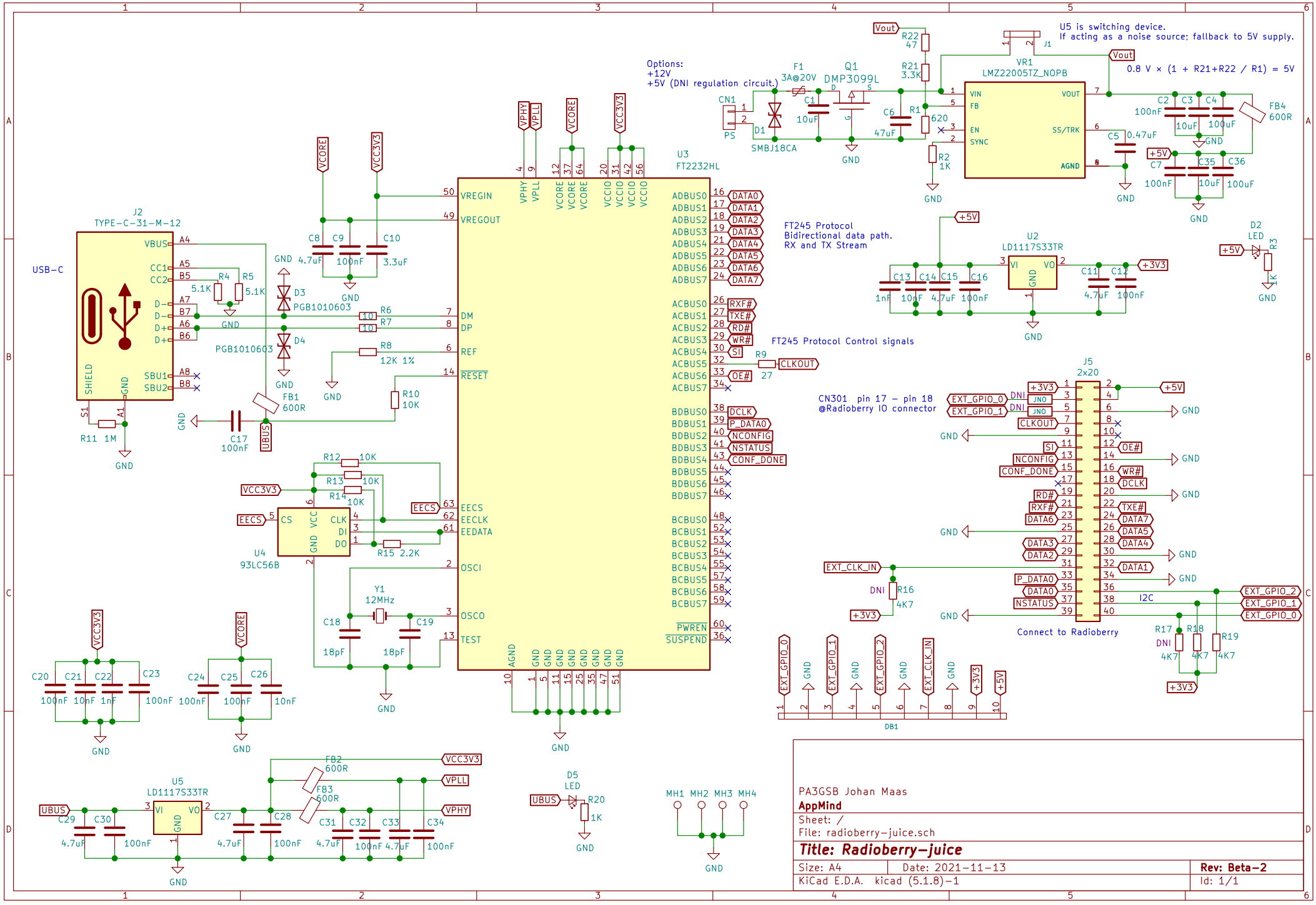
U5 is switching device.
If acting as a noise source; fallback to 5V supply.
0.8 V × (1 + R21+R22 / R1) = 5V
Options:
+12V
+5V (DNI regulation circuit.)
VR1
LMZ22005TZ_NOPB
U3
FT2232HL
J2
TYPE-C-31-M-12
USB-C
FT245 Protocol
Bidirectional data path.
RX and TX Stream
FT245 Protocol Control signals
U2
LD1117S33TR
J5
2x20
CN301 pin 17 – pin 18
@Radioberry IO connector
Connect to Radioberry
U4
93LC56B
Y1
12MHz
U5
LD1117S33TR
PA3GSB Johan Maas
AppMind
Sheet: /
File: radioberry-juice.sch
Title: Radioberry-juice
Size: A4
Date: 2021-11-13
Rev: Beta-2
KiCad E.D.A. kicad (5.1.8)-1
Id: 1/1