Marwadi
education foundation

ISSN 2394-7888

DEPARTMENT OF
COMMUNICATION SKILLS

International Journal of Humanities In Technical Education

(A Bi-annual Refereed Journal)

Volume 1 | Issue 1 | January, 2015

International Journal of Humanities in Technical Education(IJHTE)

PATRONS

Mr. Ketan Marwadi, Chairman, MEFGI
Mr. Jitubhai Chandarana, Vice-Chairman, MEFGI
Dr. Y.P. Kosta, Director, Technical Campus, MEFGI
Dr. R.B. Jadeja, Dean, Faculty of Engineering, MEFGI

CHIEF EDITOR

Dr. Sunil Sagar
Head, Department of Communication Skills,
Marwadi Education Foundation's Group of Institutions, Rajkot

EDITORIAL BOARD

Dr. Aimee Pozorski, Central Connecticut State University, USA

Dr. Heini-Marja Jarvinen, Foreign Language Education, University of Helsinki, Finland

Dr. Suresh Raval, Arizona University, USA

Dr. Avadhesh Kumar Singh, School of Translation Studies and Training, IGNOU, New Delhi

Dr. Gurumurthy Neelakantan, Department of Humanities and Social Sciences, IIT Kanpur

Dr. Sangeeta Sharma, Department of Languages and Humanities, BITS Pilani, Rajasthan

Dr. H. S. Komalesha, Department of Humanities and Social Sciences, IIT Kharagpur

Dr. Sanil V, Department of Humanities and Social Sciences, IIT Delhi

Dr. Kamal Mehta, Department of English & Comparative Literary Studies, Saurashtra University, Rajkot - Gujarat

Dr. Rajendrasinh Jadeja, Director, HM Patel Institute of English, Training and Research Vallabh Vidyanagar - Gujarat

Dr. Atanu Bhattacharya, School of Language, Literature and Culture Studies, Central University of Gujarat, Gandhinagar - Gujarat

Dr. Dilip Barad, Department of English, Maharaja Krishnakumarsinhji Bhavnagar University, Bhavnagar - Gujarat

International Journal of Humanities In Technical Education

(A Biannual Refereed Journal)

Volume 1 | Issue 1 | January, 2015

Editor

Sunil Sagar

Form-IV

1. Place of Publication : Rajkot

2. Periodicity : Biannual

3. Printer's Name : Apurva Grafik
Nationality : Indian
Address : 635, Jimmy Tower,
Opp . Saminarayan Gurukul,
Dhebar Road, Rajkot - 360 001.

4. Publisher's Name : Marwadi Education Foundation's
Group of Institutions, Rajkot.
Nationality : Indian
Address : Marwadi Education Foundation's
Group of Institutions,
Gauridad – Rajkot - 360 005.

5. Editor's Name : Dr. Sunil Sagar
Nationality : Indian
Address : Department of Communication Skills,
Marwadi Education Foundation's
Group of Institutions,
Gauridad – Rajkot - 360 005.

6. Name and Address of the Individuals who own the Newspaper and partners/Shareholders holding more than one percent of the Capital : Nill

MEFGI hereby declares that the particulars are true to the best of our knowledge and belief.

Sd.
(MEFGI, Rajkot)

International Journal of Humanities in Technical Education

Author Guidelines

1. **International Journal of Humanities in Technical Education** is a biannual refereed journal i.e. in January and July.
2. **Intimation of Acceptance/Non acceptance:** Authors will be intimated by e-mail within three months of receipt of the article/research paper.
3. **Submission of article/research paper:** Authors are requested to submit the papers in MS word format by email attachment to ijhte2014@gmail.com.
4. **Title:** A brief phrase describing the content of the article/research paper.
5. **Length of the article/research paper:** 8-10 pages including endnotes, list of works-cited/references.
6. **Font:** Times New Roman, **Size: 12** for main body content and **14** for headings. Avoid unnecessary and excessive use of bold and italics.
7. **Line spacing:** Double spaced, all justified.
8. **Abstract:** Not more than 150 words, it should be informative and completely self-explanatory.
9. **Key Words:** Maximum 5-10 words.
10. **Style Manual:** Strictly follow the latest MLA style manual.
11. **Abbreviation:** Use only standard abbreviations; all non-standard abbreviations are to be introduced in the parentheses.
12. **Non-English terms:** In *italics* with diacritical marks.
13. **Tables/Charts/Diagram:** Each table/chart/diagram should be designed to be as simple as possible. Tables should be prepared in Microsoft Word. Graphics should be prepared using applications capable of generating high resolution GIF, TIFF, JPEG or PowerPoint before pasting in the Microsoft Word manuscript file.
14. **Figure Legends:** Figure legends should be typed in numerical order on a separate sheet. Use Arabic numerals to designate figures and upper case letters for their parts (e.g. Figure 1).
15. **Reviews:** The reviews, of books and language software, should conform to the thrust area and/or the specific themed issue of journal. Reviews should be written within 3-5 pages only.
16. **Plagiarism:** Observe academic and intellectual honesty. Only authors are responsible for any violation of copy right contents used in their articles/research paper without acknowledging the original source.
17. **Biographical Information:** Institutional affiliation, position, discipline and major research interests.
18. **Copyright:** All rights reserved with **International Journal of Humanities in Technical Education**.

Contents

Editor's Note: **Page No.**

1. **Learning Contextualized Language: Implications for Tertiary Foreign-medium Education** **1**
   - Heini-marja Jarvinen

2. **Developing a Task-based Approach for Teaching Scientific and Technical Writing in English** **13**
   - Meenakshi Raman

3. **English in India -** Kapil Kapoor and R S Gupta **29**

4. **Towards Interdisciplinary Studies and New Humanities in University in India** - A K Singh **40**

5. **Literacy Online: Multilingual English Language Learners' Electronic Literacy Practices Outside Class** **56**
   - James Simpson

6. **Using Blog to Enhance Writing Skill Through Story Writing** - Dilip Barad **71**

7. **Reading Skills: Is it Required for Technical Education ?** **82**
   - Atanu Bhattacharya

8. **Effectiveness of the Formative Assessments to Develop Communicative Competence** **91**
   - S M Gohil and Sharon Patel

9. **Communication Skills for Engineering Professionals** **96**
   - Sangeeta Sharma and Poonam Vyas

Editor's Note

International Journal of Humanities in Technical Education
A Bi-annual Refereed Journal
In a knowledge-driven and research-defined space of academics, writing on the key issues that face us in the domain is not optional but inevitable. While there are varied publications for ELT and Humanities with respect to Higher Education, a journal that assists in providing such an intellectual space to the faculty of Humanities in institutions of technical education was long overdue. International Journal of Humanities in Technical Education (IJHTE) seeks to facilitate the discourse over the fundamental issues of Humanities with respect to its role and space in technical education. The IJHTE would serve as the forum of technical education in India that provides defining insights pertaining to Humanities in Technical Education. It is pertinent to note that IJHTE has been graced by the insights and guidance of some of the finest minds in the technical education institutions in the country and abroad. I wish to take the opportunity to place on record the gratitude to the experts and scholars from some of the country's leading institutions and foreign universities abroad who kindly consented to be on the Advisory Board of the Journal. We are grateful to scholars like Prof Kapil Kapoor and Prof A K Singh whose seminal papers we have reprinted in the first issue with their kind permission without which the first issue would not succeed in initiating the discourse. In order to draw insights from the best practices from foreign universities, we have endeavoured to invite and include papers that track the way Humanities is perceived in technical education abroad. We have also included in the first issue some of the best practices of the noted practitioners in Gujarat who have carried out defining work in the area of language studies. We deemed it fit to bring out the first issue on 'The Role of Languages in Technical Education' considering the fact that there has been no substantial discourse on this area.

Technical Education is a strange domain in India in which on the one hand, there are IITs, NITs and BITS Pilanis which celebrate Humanities and on the other hand, there are engineering colleges that give step motherly treatment to Humanities and have reduced it to teaching of communication skills. IITs have full-fledged departments of Humanities and Social Sciences in which the faculty carry out research and publications with respect to the core areas of literature and literary theory, apart from linguistics, media studies etc. They are akin to the Departments of English in various State Universities. There is no threat to Humanities in IITs or NITs. But engineering colleges have confined Humanities to the teaching of Communication Skills and teachers of English working in these colleges face an uphill task of researching in the core areas while they teach what is inessential and marginal. The Journal wishes to serve as a forum for celebrating the significant work by IITs, NITs and other institutes of repute and for addressing issues that plague Humanities in Technical Education.

The first issue of the IJHTE is dedicated to the fraternity of teachers of English in technical education.

We are infinitely grateful to the MEFGI management for extending wholehearted support for initiating the journal.

International Journal of Humanities in Technical Education
Volume 1 | Issue 1 | January, 2015

Learning Contextualized Language: Implications for Tertiary Foreign-medium Education

Heini-Marja Jarvinen[1]

Introduction

There are numerous models and definitions of bilingual education all over the world ranging from the relatively rigid Canadian immersion models to models in which the use of two languages in teaching content is the only feature characteristic of bilingual education. In spite of this multitude, lack of clear, research-based definitions is obvious. Some of the definitions of CLIL are as follows (bolds are mine).

> (1) Content and Language Integrated Learning (CLIL) is a **generic** term and refers to **any educational situation** in which an additional language and therefore not the most widely used language of the environment **is used for** the **teaching** and **learning** of subjects other than the language itself (Marsh & Langé 2000, iii)
> (2) It is an educational approach in which **languages** and skills of **communication** are given a **prominent role** within a curriculum. It is often carried out by professionals who teach on courses other than languages. (Marsh et al. 2001).
> (3) CLIL is a multifaceted approach which is implemented to reach **specific outcomes** which enhance the **learning of field specific education alongside**. (Marsh et al. 2001).

It appears from the definitions above that CLIL is indeed a "multifaceted approach" that can be used in any educational situations with varying foci depending on the mutual emphasis of content and language. Definition (3)

---

[1] Professor, Department of Foreign Language Education, University of Helsinki, Finland

is probably the most general and the most problematic one for someone who is keen on finding accurate definitions for phenomena, such as CLIL. One may ask what is meant by “specific outcomes which enhance the learning of field specific education alongside”? Furthermore, what is meant by “integrated” in “content and language integrated” How are “content” and “language” to be defined as part of CLIL?

To the best of my knowledge, there are no clear-cut answers to the above questions, especially if they are asked in the context of tertiary education. At the practical level and in the context of primary and secondary education, where the central role of national and local curricula is acknowledged, some of these questions get their answers from the curricula. In general, the content to be taught and learnt largely determines the language to be used. At the theoretical level and in terms of learning language and content, there are a number of issues that have not been answered adequately. In addition to the key question, i.e., why language learning as part of content learning is effective, there are other, related questions. One of them is the relation of content and language. How are content and language related and does this have an effect on the learning of language or content or both? In other words, what does “integrated” refer to (in content and language integrated learning)? Does it refer to the vehicular role of the foreign language, a *lingua franca* (Holdsworth 2004: 24) used in the delivery of 'authentic' content? Or does it refer to the teaching of simplified, perhaps “watered down” content through a language matching the learners' current level of language learning? Or does it refer to focusing on content-specific knowledge hierarchies, related thinking skills and corresponding language skills? Or does it refer to some other combination of content and language?

The above questions are important and timely for increased awareness of foreign-medium teaching and in particular, the role of learning in foreign–medium teaching. There are numerous approaches, such as Language for Specific Purposes, Content-Based Instruction, Content-Based Language Teaching, immersion teaching and CLIL, but it is difficult to make a distinction between these approaches in terms of learning outcomes. For example, CLIL with its double learning outcome of content and language is not a typical model of language-medium teaching in tertiary education. Instead, foreign-medium content teaching in higher education tends to refer to teaching with content learning objectives. This means that the language of instruction has a more or less vehicular role and there are no explicit language learning goals. This type of foreign-medium teaching is the starting point of the present paper. The purpose of the rest of this paper is to discuss the possibilities of content teaching as inducing (implicit) language learning.

Content and Language Integrated Learning (CLIL), Content-Based Instruction (CBI) and Language for Specific Purposes (LSP)

CLIL is a European educational model and a relatively new approach to learning and teaching of language and content, although learning content through a foreign language is nothing new as such and many forms of language-medium instruction or bilingual education, such as immersion and content-based instruction have been around for decades.

Another, more fruitful, source for useful applications for Finnish CLIL implementations for higher education is to be found in different forms of content-based instruction, which is a form of language and content instruction targeted at immigrant speakers of languages other than (American) English in the United States. The literature is ample, and it involves research as well as instructional models and teaching materials. The definition of comes close to that of CLIL: "Content-based language instruction (CBI) refers to the integration of school or academic content with language-teaching objectives" (Wesche & Skehan 2002, 220).

According to Wesche and Skehan (2002, 221), all programmes of content-based language teaching share the same contextual and pedagogical features. In higher professional education, the teaching of professional language skills, known as Language for Specific Purposes (LSP), has added an explicit emphasis on formal language skills. Following are the common features:

- The premise that learners in some sense receive "two for one", that is, content knowledge and increased language proficiency.
- A language curriculum in which expository texts and discourse are central.
- Orientation into a new culture or "discourse community" (e.g. an institution providing higher education).
- Adaptation of language input, interactional moves, and context to accommodate learners' limited language proficiency.
- Focus on academic language proficiency. (Wesche and Skehan 2002, 221)

It seems that there are very few differences between CLIL and CBI that would matter at the level of implementation. I will use both terms to refer to the instruction that combines the teaching and learning of content and language.

Table 1 compares two approaches to content-based instruction in terms of the role of context, interaction and learning. For the clarity of presentation only, these views have been titled as *traditional* and *environmentalist* views.

Table 1. Two views on context, interaction and learning of language and conceptual content in CLIL.

TRADITIONAL VIEW	ENVIRONMENTALIST VIEW
Context is the source of input. Language learning is receiving comprehensible input (Krashen). Challenging spoken and written output may be necessary for further development of language proficiency (Swain).	Context is the source of language learning (ecological theory, the sociocognitive approach). Usage-based language learning (Robinson & Ellis, Larsen-Freeman)
Interaction is negotiating meaning & form Appropriate questions (referential questions cause more interaction than direct questions, (Shomoossi, 2004: 99) and feedback (extended IRF, elicitation, recasts, Lyster) promote interaction.	Interaction takes place at many levels: dynamic (sub) systems (DST), learner and context. Interaction in the zone of proximal (ZPD) development results in internalization (=learning) (Vygotsky)
Thinking skills & related language (Mohan), content-specific discourses (ESP) Content-specific language (concepts) is necessary for content learning (CALP, Cummins). Scaffolding (Bruner) is used to add support (context) to conceptual, context-free objects of learning.	In adult learning, when there are no maturational stages, scientific concept learning is the starting point, then these internalized concepts are used to form new ZPDs at a practical level. (Vygotsky)

The 'traditional' view is mainly based on research and models of immersion language learning and teaching, constructivism, and language learning theories, such as Krashen's and Swain's theories. The environmentalist perspective to learning has its starting point in the context and the interaction of an organism with the context in which it finds itself. Sometimes this interaction is necessary for the survival of the organism. In language learning, the mutual relation of context and the individual's mental faculties varies from one approach to another, but in all of them, context is primary and the individual's mental resources a secondary source of learning.

Why an ecological perspective?

As mentioned above, CLIL as well as content-based language teaching (CBLT) lacks a coherent theoretical framework, which among other things would specify what *language*, *content* and *integrated* (Holdsworth 2004) mean in the context of content and integrated learning, and in particular, what – if any – specific features *learning* in such a context has, and where the added value comes from that results in the form of enhanced language and content learning. Part of the answer is likely to consist in the ample time-on-task that long-term CLIL programmes offer compared to conventional language teaching. Another part may be due to the rich input and affordances that are available to the learner in this environment. Context has an important role in content and language integrated learning, and even more so in the non-mainstream approaches to language learning, such as the sociocultural view, which is heavily influenced by neo-Vygotskian ideas of learning as a primarily social (and secondarily mental and individual) phenomenon (e.g. Kozulin et al. 2003). In this view, content and context are seen as closely related even so that content can only be understood in context, where it receives its full meaning. In line with the sociocultural and sociocognitive approaches on language learning (see also Bruner 1996), what we know of as CLIL, content and language integrated learning, is here viewed from the ecological perspective. CLIL might in this context perhaps serve as an acronym for *Context* and Language Integrated Learning. Below, I will first look at input and affordances and discuss these concepts in more detail (cf. Table 1 above). I will then move on to discussing the ecological perspective to content and language integrated learning.

Input vs. Affordances

Comprehensible input refers to language input that is targeted at the learner's current level of language proficiency (i) but contains an element (+1) that exceeds this level (i+1), involving potential for further language learning. The concept of comprehensible input is part of Krashen's Input Hypothesis, a theory of SLA, which in spite of substantial criticism has been and still is widely referred to in so called naturalistic approaches to language, such as immersion and more recently, CLIL. This is understandable, as naturalistic language learning, by definition, takes place in contexts where ample ambient input is available. The influence of input + 1 on language acquisition is less clear, however. It seems that comprehensible input may suffice for language comprehension to develop, but it is not enough for error-free, native-like language production to emerge.

The role of input is viewed from a different angle in recent non-mainstream views of language use, such as sociocognitivism. As a matter of fact, the terms 'input' and 'acquisition', for example, are seen as reflections of a metaphor of language as an endowed capacity, regulated by a language acquisition device, existing in the form of relatively stable, passive 'input', which is picked up and internalized by the language user and stored in the form of abstract rules for later language use. In stark contrast is Atkinson's (2002: 535) view of (linguistic) knowledge organized in the form of “actional wholes”, which means that language is embodied in the carrying out of action in the world. According to Atkinson, it is not possible that such knowledge could develop via decontextualized internationalization. The non-mainstream approaches, such as sociocultural, sociocognitive and ecological approaches, view language as activity which is in dynamic interaction with its context.

Another view on input, closely related to the above mentioned non-mainstream approaches, is the view of input as affordances. The following quote provides a definition of affordances in the words of Gibson, the creator of the Theory of Affordances:

> Roughly, the affordances of things are what they furnish, for good or ill, that is, what they **afford** the observer. Not only objects but also substances, places, events, other animals, and artifacts have affordances. We might begin with the easy-to-perceive components of the environment consisting of surfaces and surface layouts. And we should assume a human animal as observer, to start with, since the list of affordances will be somewhat different for different animals.
>
> I assume that affordances are not simply phenomenal qualities of subjective experience (tertiary qualities, dynamic and physiognomic properties, exc.). I also assume

> that they are not simply the physical properties of things as now conceived by physical science. Instead, they are **ecological**, in the sense that they are properties of the environment **relative** to an animal. These assumptions are novel, and need to be discussed." (Gibbons 1971)

Some examples of affordances (Gibson 1971):

- a sit-on-able surface (affording sitting).
- a stand-on-able object, stool, affording a high reach.
- a substance that affords pouring, dripping, dabbling. A **liquid**.
- a substance that affords smearing, painting, trace-making. A **viscous** substance.

Singleton and Aronin (2007) discuss multiple languages as affordances and view language awareness of key importance in utilizing the linguistic affordances: "Clearly, the higher the level of language awareness is, the more effectively language-related possibilities are likely to be perceived and capitalised upon." (Singleton & Aronin 2007: 85; cf also van Lier 1996, 2004)

The concept of affordances might offer a good candidate for a focused definition of *integrated* in CLIL for tertiary level. The affordances provided by the content area and related language would seem to open up new possibilities of both learning contextualized language and developing content-based thinking in creative ways.

Ecological perspective and the Dynamic Systems Theory (DST)

A narrow, biological definition of ecology is the study of the relationships between biological organisms and their environments. More widely, ecology is used to describe phenomena in their context and to understand both the context and the interactions that create that context. According to Marc Garner and Erik Borg (2005), language ecology provides an appropriate framework to view content-based instruction (CBI), as it places situatedness, interaction and variability at the centre of language theory (Table 2). The key elements of an ecological view to language are the following: Language is holistic, dynamic and interactive, and situated. (Garner & Borg 2005).

Table 2. Relevant features of the ecological perspective on language (modified on the basis of Garner & Borg 2005)

ECOLOGICAL PERSPECTIVE ON LANGUAGE	CONTRASTING VIEWS ON LANGUAGE
Holistic: complex wholes and systems	Traditional view of language, Cognitivism: Language is essentially an abstract rule-based system.
Dynamic and interactive: communication is recursive, dialogic. The response (in the interaction) is primary for the understanding of the interaction in its entirety.	Communication theory: communication consists of transferring messages (sender>message>receiver)
Situated: Language is a form of being and behaving in the world.	“Segregationism”: Language is an abstract rule-based system, isolated from its purposes and uses.

In an ecological view, communication occurs at several levels of complexity simultaneously. It does not consist of discrete messages, but of a series of overlapping and interrelated meanings. The three levels of complexity are the *communicative act*, the *communicative event* and the *communicative link*. Communicative acts may be utterances (essay, a brief exchange) that are included in series of acts to make up larger entities, such as books, lectures, and conversations. A communicative event is made up of communicative acts, it has its independent function, clear beginning and end. Finally, the communicative link is at the highest level of complexity. The function of a link is to connect the other two levels of communication and integrate them. Links, such as friendship, institutional structure, and classroom instruction provide a connection between the individuals involved, which may be very brief or last a lifetime. (Garner & Borg 2005: 124 – 125).

According to the Dynamic Systems Theory (De Bot et al. 2007), a language learner is viewed as a dynamic subsystem operating within a social system. All three levels of communicative complexity described above are linked to the *social ecosystem*, which provides for the environment and e.g. language exposure which is necessary for the realization of communicative acts and events. Further resources that are necessary for the realization of the communicative act in question, such as cognition, intelligence, aptitude and motivation, are contained in the learner's own *cognitive ecosystem.*

There is a minimal amount of force or resources that is necessary for any system to grow, but the resources are compensatory, so a low aptitude may be compensated by high motivation or vice versa. From a DST perspective, the language learner is one of the dynamic subsystems within a large social system, which in turn has a great number of interacting internal dynamic sub-systems. All these subsystems are linked to and function within numerous other external dynamic systems.

Typical of all dynamic systems is that they are always in change. The system evolves stage by stage, the current stage building on the previous one. It is possible that a very small change has an enormous effect (cf. the butterfly effect) and equally possible that an enormous force leads to seemingly modest result. The dynamism of the system can be compared to a surface with holes and bumps. The holes represent what are called *attractor states,* i.e. stages where the development seems to have come to a halt, and the bumps represent so called *repeller states*. An attractor state might be reflected by the stagnation of the language proficiency of immersion learners at an intermediate stage. To trigger the development of the production skills of these learners, Merrill Swain (1993) suggested challenging output, which in the DST translates as the use of a strong force to release the development from the attractor state. It is typical of dynamic systems that they have no end state. Therefore, even fossilization can be seen as reflecting an attractor state. Although there is some predictability in what causes certain systems to settle in certain states, such as first language influence or overgeneralizations from other languages, there are states that cannot be predicted nor explained by such influences (De Bot et al. 2007).
In the developmental process certain sub-systems are *precursors* of other sub-systems. Not all sub-systems require an equal amount of energy, because there are also *connected growers*, as may be shown in the dispersion of growth in the lexicon and grammar. An example of one child's vocabulary and grammar development (a spurt in vocabulary growth was followed by the emergence of plural –s) (Ellis 2007) may reflect vocabulary and grammar as connected growers. It may also reflect an attractor state. However, Ellis says that although he holds “dear both the critical vocabulary mass theory of grammar development and resource limitation models, we are a long way yet from proof. “ (Ellis 2007: 25).

In sum: what does this all mean for CLIL and its potential in higher education?

Above, I have taken an ecological perspective on content and language integration with a view of advanced language learners in higher education. At the same time, I have attempted to take a new look at some of the features that are frequently considered key characteristics of content-based language teaching. As part of the ecological perspective and as a way of contrasting the traditional manner of looking at the content/context with another way –a relative novelty in language learning, but dating back to the seventies – I have discussed the concepts of *input* and *affordance* in more detail.

The views on language as situated activity with a strong sociocultural and sociocognitive emphasis were chosen to be discussed in this paper because of the emphasis they place on the active role of language and its intimate contact with context. After all, there is a difference between learning language in so called formal instruction, where the focus is by definition on the formal aspects of language no matter what language teaching method is used. The goal is language learning and the content is less important. In content teaching the importance of content (again by definition) is primary. In language-medium teaching in tertiary education, the language of instruction traditionally has a vehicular role in the delivery of the content, and the learning of language is not a separate goal.

The ecological perspective seems to offer *context* as a definition for *content*. Context has two contrasting references: it has the flavour of *generic* (as contrasted with biological, historical etc. content matter), but at the same time it refers to something that is intricately linked to the present *situated meaning*. In addition, the *affordances* view of input - what the context can 'afford' in terms of learning language - adds another component to the definition of content as context.

The dynamic systems view was selected to give an account of *language as a dynamic system*, always in flux and in interaction with numerous subsystems both internal and external, falling in attractor holes and bouncing over repellers, vocabulary heaping up in critical masses and triggering grammar on the way, unpredictable and capricious in its development. This was also done for the connection that language has to the context. Language development is related to context, the context has an influence on the language. Context and language interact and collaborate in growing in complexity. The metaphor of dance is sometimes used for this relationship. For a language teacher, the idea of language not adhering to prescribed rules and explicit teaching seems strange and frightening, but for a content teacher the idea of not having to teach the formal aspects of language may be a relief.

The definition of *integrated* has already been referred to above. It is ingrained in the new angle provided by the relationship of language as a dynamic system, closely linked to the context and the context with all of its affordances to bring to the relationship of language and content.

The views presented above are meant to inspire those who work in content and language integrated programs to look more closely at the content/context of the subject they teach and try to find out what they afford in terms of discourses, hierarchies and new angles; what is the language syllabus in the content area; what the meanings to be negotiated, what the scientific concepts to be related to the context on the two levels are, theoretical and practical; what the levels of interaction are; and how interaction can be promoted at all levels. In spite of the ecological perspective adopted here, the 'traditional' view and its practices (Table 1) are neither inferior nor superior to it, just different and at best, complementary.

References

Atkinson, D. 2002. Toward a Sociocognitive Approach to Second Language Acquisition. *The Modern Language Journal*, Vol. 86 (4): 525-545.

Bruner, J. 1996. The Culture of Education. Cambridge, Mass.: Harvard University Press.

Cummins, J. 1998. Immersion education for the millennium: What have we learned from 30 years of research on second language immersion? Reprinted on the CARLA website with permission. Available: http://www.carla.umn.edu/cobaltt/modules/strategies/immersion2000.html

De Bot, Lowie, K. W. & Verspoor, M. 2007. A Dynamic Systems Theory approach to second language acquisition. *Bilingualism: Language and Cognition* 10 (1), 7–21.

Ellis, N. 2007. Dynamic systems and SLA: The wood and the trees. *Bilingualism: Language and Cognition* 10(1), 23 – 25.

European Commission 2004. Implementation of the Education and Training 2010 Work Programme. Working Group "Languages" Progress Report December 2004. Directorate-General for Education and Culture. Life Long Learning: Education and Training policies. Multilingualism policies. Available: http://ec.europa.eu/education/policies/2010/doc/lang2004.pdf

Garner, M. & Borg, E. 2005. An ecological perspective on content-based instruction. *Journal of English for Academic Purposes* 4, 119–134.

Gibson, J.J. 1971. A Preliminary Description and Classification of Affordances. Available: **http://huwi.org/gibson/prelim.php**.

Holdsworth, P. 2003. EU policy on language learning and linguistic diversity as it relates to Content and Language Integrated Learning in Higher Education. In R. Wilkinson, (Ed.) *Integrating Content and Language: Meeting the challenge of a multicultural higher education.* Maastricht, Netherlands: Universitaire Pers, Maastricht, Netherlands, 20 – 27.

Kozulin, A., Gindis, B, Ageyev, V. S. & Miller, S. M. (Eds.) 2003. *Vygotsky's Educational Theory in Cultural Context.* Cambridge: Cambridge University Press.

Lantolf, J.P. 2003. Intrapersonal Communication and nInternalization in the Second Language Classroom. In A. Kozulin, B. Gindis, V.S. Ageyev & S. M. Miller (Eds.) Vygotsky's Educational Theory in Cultural Context. Cambridge: Cambridge University Press, 349 – 370.

Marsh, D. & Langé, G. 2000. *Using Languages to Learn and Learning to Use Languages*, Jyväskylä: University of Jyväskylä.

Marsh D., Marsland B. & Stenberg K.2001. *Integrating Competenciess for Working Life – Unicom,* Jyväskylä: University of Jyväskylä.

Shomoossi, N. 2004. The effect of teachers' questioning behavior on EFL classroom interaction: A classroom research study. The Reading Matrix 4 (2) 96 – 104.

Singleton, D. & Aronin. L. 2007. Multiple Language Learning in The Light of the Theory of Affordances. Innovation in Language Learning and Teaching 1(1), 83 – 96. Swain, M. 1993.

van Lier, L. 1996. *Interaction in the Language Curriculum: Awareness, Autonomy & Authenticity*. London: Longman.

van Lier, L. 2004. *The Ecology and Semiotics of Language Learning*. Boston: Kluwer. London: Longman.

Wesche, M.B. & P. Skehan. 2002. Communicative, Task-Based, and Content-Based Language Instruction. In: R.B. Kaplan (Ed.) *The Oxford Handbook of Applied Linguistics*. Oxford: Oxford University Press, 207 – 228.

International Journal of Humanities in Technical Education
Volume 1 | Issue 1 | January, 2015

Developing A Task-based Approach for Teaching Scientific and Technical Writing in English

Meenakshi Raman[2]

Introduction

Michael Faraday, the great British physicist and lucid expositor of his own work is reported to have defined research as consisting of three steps: start, finish, publish. (Rutherford Andrea J 2001:35). The growing demands and increasing expectations of the professional world make it necessary for scientists and technologists to communicate their ideas clearly and effectively in writing which may include the definition of scientific and technological terms, description of an equipment , process adopted in an industry, reports written for an accomplished project or proposals submitted to receive financial support for a research project. In the world of increasing international academic research articles, English as an international language of science and technology plays an important role and serves as the major channel of sharing scientific knowledge among the members of academic discourse community. (Chalak and Norouzi 2013). The challenge lies not only in achieving scientific and technical advances but also in meeting the demand for conveying involved concepts clearly and concisely; additional effort is required to present good ideas effectively. Scientists from all disciplines in their attempt to explain something to a third party may or may not become comprehensible to each other. It is not just enough to be understood; it is important to be not misunderstood.

Those who work in engineering and other technical fields too often view writing as an unpleasant - although necessary-task. This all-too-common dislike for writing may originate in part with past unpleasant experiences,

---

[2] Professor and Head, Department of Humanities and Social Sciences,
BITS Pilani, K K Birla Goa Campus, Goa, India.

perhaps when a teacher or reviewer returned an assignment covered with so much red ink that it appeared to be bleeding. Although the comments would have been well intentioned, the recipient might well have experienced a sense of failure and developed a range of problems including procrastination, anxiety, and writer's block. (Stevenson & Whitmore, 2002:03) Or perhaps the students of science and technology may find the writing classes dull and drab and hence may not develop a liking for the same despite knowing that acquiring proficiency in writing is vital for their professional success. Even many teachers realise that writing is a problem for their students because, most of the times, when involved in writing tasks with their students, teachers perceive a feeling of frustration and discontent which reminds them of their own problems with writing when they were at school (Luchini 2010). Here comes the importance of task-based approach to teaching writing for such students.

Task-based approach as against conventional approach requires the teachers to use various tasks – such as listening, speaking, reading, identifying, analysing, and discussing to teach writing to the students of science and technology. As we are aware, in the conventional approach, teachers give a writing assignment to their students and ask them to complete the same in a specified time. After the students complete it they evaluate and return the answer sheets incorporating their comments. This approach expects the students to take the entire burden on themselves and the teachers' role is insignificant. On the other hand, in the task-based approach, the students are made to engage themselves in some task in which the teacher acts as a facilitator. Through this task, the students are taught various aspects of writing and hence they find it interesting.

This paper provides an insight into the three important writing tasks the students of science and technology need to undertake during the course of their academic or research tenure: definition, description of equipment, description of a process. For each of these three categories of writing, two sample tasks have been discussed and answers have also been provided to facilitate the teachers of English for Science and technology (EST).

2 Tasks / Exercises related to Definitions, Descriptions and Processes

2.1 Technical Definitions

A theoretical explanation of the term "Definition"

Definitions of terms are the foundation of technical writing. A precise set of terms is used in technology, and only with a common understanding of those terms can information be communicated clearly. In its broadest sense, a definition is a statement giving the meaning of a word or term

(Nagaraj 2003: 21). However, in EST, definitions are used a rhetorical devices to clarify the meaning of a term in a compact and straightforward manner.

Let's now look at a simple definition "A generator is a machine which converts mechanical energy into an electrical one".

"Hyper Text Transfer Protocol is a computer access code that provides secure communications on the Internet, an intranet, or an extranet."

What is the term defined here? The term defined is generator. When we define, we give information like the class (C) to which the term (T) belongs and how it differs (Differentia-D) from other members of the class. Now, let us examine the above definitions and find out the term, the class and the differentiating quality of the term.

Term = generator
Class = machine
Differential = converts mechanical energy into an electrical one.

Extended or Expanded Definitions

Sometimes it is difficult to define terms in a single sentence. It may have to be expanded. Definitions are expanded by using methods like comparison and contrast, analogy, example and derivation. Students may come across this type of expanded or extended examples in their subjects in science and technology. (Andrews and Bickle 1982: 136)

A diesel engine is similar in design to a conventional engine except that it is more heavily constructed to withstand extremely high compression. The high compression allows the diesel to operate on a much cheaper grade of fuel than the type of fuel used in a conventional engine

An ecosystem is similar to a computer or any other mechanical device that has many intricate and related parts. If even the smallest component breaks down, the machine will not function properly. So also the ecosystem is damaged by problems caused by humans.

In the first definition, the diesel engine is compared with the conventional one and the diesel engine's distinguishing features are brought out. Here, the method used is comparison and contrast.

In the second definition also, there is a comparison. But ecosystem is defined by using the analogy of a machine (like computers).

When you need to provide an extended definition of a paragraph or more, in addition to providing the term, type, and distinguishing characteristics, also consider including examples, procedures and descriptions. Look at the following definition of a voltmeter: (Gerson & Gerson 2000: 68)

The voltmeter is an instrument used to measure voltage. The voltmeter usually consists of a magnet, a moving coil, a resistor, and control springs. Types of voltmeter include the microvoltmeter, millivoltmeter, and kilovoltmeter, which measure voltages with a span of 1 billion to 1. By connecting between the points of a circuit, voltmeters measure potential difference.

Tasks to teach Definitions

Task 1

Here are some definitions. Identify their parts and fill in the grid given below. The first one is done for you:

1. Instruments of measuring temperatures are called thermometers.
2. Chemistry may be defined as the branch of science which deals with the compositions and behaviour of substances.
3. Torque is a force that tends to rotate or turn things.
4. Electron is a sub-atomic particle carrying a negative charge.
5. Girder is a main horizontal or rear horizontal structural member that supports vertical loads.
6. A car is a vehicle that contains four wheels and is driven on land.

TERM	CLASS	DIFFERENTIA
Thermometer	Instrument	Measuring temperatures
Chemistry	-----	Composition and behaviour of substances
----	Force	Rotate or turn things
Electron	Sub-atomic particle	-----
Girder	-----	Supports buildings
Car	Vehicle	-----

ANSWER

TERM	CLASS	DIFFERENTIA
Thermometer	Instrument	Measuring temperatures
Chemistry	Science	Composition and behaviour of substances
Torque	Force	Rotate or turn things
Electron	Sub-atomic particle	Negative charge
Girder	Horizontal structure	Supports buildings
Car	Vehicle	Four wheels & driven on land

Task 2

The passage given below abounds in definitions. Pick out those definitions and write them down. While writing the definition, follow the format discussed in the preceding discussion. You may have to remove unnecessary information

Light may be defined as the external physical agency by which the eyes receive the sensation of sight. A body will be visible to the eyes only when the light transmitted from it reaches the eyes. Light itself, however, is invisible. A body like the sun, which emits light of its own accord is said to be self-luminous. A body which does not emit light, but is seen only by means of light which it receives from a luminous is said to be non-luminous. Most objects in this world are non-luminous. A substance through which light can pass is said to be transparent e.g. glass, water, etc. Substances which obstruct the passage of light through them are said to be opaque. Substance which allow the passage of light through them but through which objects cannot be seen are said to be translucent e.g. ground glass, oiled paper.

1.---

2.---

3.---

4.---

5.---

6.---

Answers

1. Light may be defined as the external physical agency by which the eye receives the sensation of sight.
2. A self-luminous body is a body which emits light of its own accord.
4. A transparent substance is a substance through which light can pass
5. Opaque substances are substances which obstruct the passage of light through them
6. Translucent substances are substances which allow the passage of light through them but through which objects cannot be seen

2.2 Technical Description

The line demarcating definitions and descriptions is blurred. An expanded definition is, in fact, a short description. Definitions limit the meaning of a term and are more focused. In fact, descriptions provide more information than definitions. According to Oxford University Dictionary (seventh edition) 'description' is “a spoken or written representation of a person, object or event. According to Gerson & Gerson (2000: 257), a technical description is “a part-by-part description of the components of a mechanism, tool or piece of equipment.” When we describe, we generally state the size, shape and/ or colour of things/persons we describe. In EST, the watchwords are clarity, precision and objectivity. Hence, while describing the shape, size, colour, as well as dimension, weight, material volume or texture of an object, we have to take great care in choosing the words which will carry clear and precise meaning. Apart from the descriptions of these physical characteristics, functions and uses of the object as well as its components are also an important aspect of description in scientific writing.

Technical descriptions are important features in several types of correspondence. They provide the end user with information about the mechanism's features or capabilities. For example, this information may tell the user what are the various components of this mechanism, quality and function of these components.

2.2.1 Types of Technical Description

Physical descriptions: Physical descriptions range from general to specific. In general description, physical characteristics are described using general spatial terms such as below, near, at the centre, opposite, etc. In specific description, understandably more specific spatial terms like 1 mm. long, 0.25 cm thick, at an angle of 20 degrees, etc., are used.

The following questions may enable you to decide how to give the general or specific descriptions:

- Is the specification vital to the description of the object?
- What is the level to which it is pitched? For instance, is it meant for general readers or for specialists; is it for school students or for post graduates?
- Where is the paragraph placed? If it is an introductory paragraph, general terms are used and later a more detailed description using specific terms are given in subsequent paragraphs.
- What is the nature of the subject? In most of the descriptions in

physical sciences, great precision and accuracy is demanded. Hence the description has to be specific. In other sciences, rigorous specifications may not be necessary.

Example

Megamouth Shark

The appearance of Megamouth is distinctive. It is a large mouth with small teeth, a broad rounded snout, a generally brownish-blackish colour on top and white underneath, and an asymmetrical tail with a long upper lobe. The interior of its gill slits are linked with finger-like gill rakers that capture its food. A relatively poor swimmer, the megamouth has a soft, flabby body and lacks keels. These are very large sharks, with the largest specimen to date reaching 4.8 meter (16 feet) and 1 tonne (2205 lb)

(Source: Wikipedia)

Functional Descriptions

Functional descriptions generally accompany the physical descriptions. Many of the definitions in scientific writings emphasize on the functions. For example the definition of generator: “A generator is a machine which converts mechanical energy into electrical energy.” The function of the generator is included here.

Descriptions typically include a definition of the object or idea, an orientation to the overall characteristics, followed by detailed descriptions of the parts in a logical order. (Houp 2002:107) For example, to describe a device, a writer would first describe the function of the device (what it does and when it is needed). Next, the writer would describe the physical appearance of the object and its component parts, one by one, in the order in which they appear or play into the larger function of the device itself.

Akin to various other types of technical writing, the descriptions do include a title precisely stating the topic of the description. This could be the name of the mechanism, tool, or piece of equipment being described.

Example

Sniper Rifle

The sniper-rifle is a self-loading weapon. The reloading of the rifle is based on utilizing the energy of powder gases which are channelled from the barrel bore to the gas piston.

Upon firing, a certain amount of the powder gases following the bullet flows through the port in the barrel bore wall into the gas chamber, exerts pressure upon the front wall of the gas piston and throws back the piston with pusher and, consequently, the bolt support into the rearward position.

Task 1

Understanding the role of nouns and adjectives in technical descriptions

The following description is taken from the instructional manual for a Fluke digital multimeter, model 8010A/8012A. Write down the physical details, nouns and adjectives describing colour, texture, size, quantity and shape.

The Fluke digital multimeter is light (2 pounds and 6 ounces for the standard model) with a low profile that hugs the work bench. The light gray case goes with any décor and is made of rugged, high-impact plastic. The handle can be rotated to eight positions to function as a handle for carrying the instrument or as a stand to tilt the front panel up for convenient operation. The handle can be rotated out of the way. To change the handle position, pull out on the round hubs where the handle joins the meter; then rotate the handle to the desired position. On the rear of the meter are a Phillips screw and a power cord receptacle. The Phillips screw holds the outer cover in place.

The LCD (liquid crystal display) covers the left part of the front panel. The right-hand portion of the front panel contains two horizontal rows of controls and connectors. The top row consists of ten pushbuttons-the four switches on the left determine the measurement function of your multimeter and the other six switches determine the range of measurement. The bottom row consists of controls and the input terminals.

Classroom discussion

Once the students are ready with the answers, teachers can ask them to read out the list of nouns and adjectives. Then they can ask the students to elaborate on what these nouns and adjectives describe. For instance, if the students have marked *light* (line 1) as a noun, they are wrong because, the word *light* here has been used as an adjective that describes the weight of the object. On the other hand, the same word *light* in line 2 has been used as an adjective that describes the colour. Similarly, the other adjectives (rugged, high-impact, front, round, power cord, outer) and nouns (multimeter, work bench, décor, plastic, handle, instrument, stand, panel, hubs, screw, receptacle, cover) can be discussed enabling the students understand not only the role of nouns and adjectives in describing an object but also the difference between their usage.

Task 2

Describing a technical device

The teacher shows the diagram of a computer-printer and poses few questions to the class. Students who have an idea about the device would come out with the names of the parts and their function. Then he/she asks the students to work in teams and write down the functions of various parts of a printer. They also need to describe how the printer works. Once the students complete the task, the teacher asks the teams to read out the description. Finally he/she distributes the printed version of the technical description of a printer to the teams and asks them to compare it with their versions.

Questions

Look at this diagram and identify the device.

Have you ever used such printers?

Can you name the numbered parts?

Do you know how the printer works?

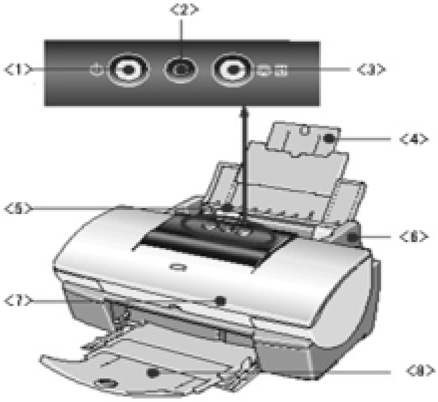

Answers (Parts and Functions):

1. Power Button: Press to turn the printer on or off.
2. Power Lamp: Indicates that the power is on/off and conditions of errors.
3. RESUME/CANCEL Button: Press when an error occurs to cancel printing in progress, or to perform print head cleaning.
4. Paper Rest: Supports loaded paper.
5. Paper Guide: Pinch and slide to align to the left edge of the paper.
6. Sheet Feeder: Load paper here. Multiple sheets of paper can be loaded

(except for some particular types of paper).
7. Front Cover: Open to replace the ink tanks or to remove jammed paper.
8. Paper Output Tray: Printed paper is ejected here.
Teachers can discuss the description of any other technical device such as nuclear reactors, mobile phones, aircrafts, etc. The tasks described above can also be effectively used to teach certain aspects of language such as vocabulary, spelling, use of numerals in technical writing, appropriate use of tense and correct forms of verbs, etc.

2.3 Technical Process

Process and procedures are concerned with development and change and hence consist of series of steps. Process description can be written to explain human tasks such as how television set is assembled. It can also be used to explain tasks that are beyond human tasks such as how the solar system was formed. The technical description of a process describes how something works, beginning with general information about the overall function of the process, and proceeding to the specific materials or skills required. The description can include a flowchart or schematic to show the sequence of actions or decision points in the process.

Task 1

The teacher explains the three parts to be included in writing the technical description of a process: (i) introduction to the device involved in the process (ii) steps in the process (iii) conclusion of the process and divides the class into teams of 5 students. Each team is given the text and is asked to read the passage carefully. Then the teams are asked to focus on the second paragraph and write down the steps in ten lines:

Text

Step-by-step process of how a spring balance is made
The device used to measure forces is called a spring balance or a dynamometer. The design of a spring balance is based on the fact that the elastic force of a spring increases as many times as the deformation of the spring.

Here is how the simplest spring balance is made. A spring with a rod and a hook at the end is attached to a plank covered with white paper (Fig. a.). A pointer is fixed at the upper part of the rod. The indication of the pointer is marked on the paper when the spring is not stretched, this is a zero scale. Then a weight with a mass of 1/9.8 kg., i.e. 102 g. is suspended from the hook. A force of gravity of 1 N acts upon the weight. The force of 1 n stretches the spring and the pointer goes downwards. Its new position is marked on the paper with the digit 1 (Fig. B.). Next a weight with a mass of 204 g is suspended and the new indication is marked with the figure 2, which means that in this case the elastic force of the spring is equal to 2 N. Using the weight of 306 g. a mark of 3 N is made and so on.

We can mark scale divisions corresponding to the tenths of a Newton: 0.1:0.2; 0.3 N, etc. For that purpose, we must divide the distances between the mark 0 and 1; 1 and 2; 2 and 3, etc., into 10 equal parts.

The graduated spring is the simplest spring balance (to graduate a device means to calibrate it with a scale).

Teachers need to check the answers for grammar, punctuation, use of cohesive devices such as connective phrases, pronouns, etc.

Task 2

This task is used to make the students understand the importance of flow charts in describing a technical process. It can also be used to check and enrich the vocabulary skills of students.

Teachers divide the class into teams of 5 and give them a passage to read. They can also read out the passage or use videos if available. They can also use power point slides to show the passage and ask the students to read and take notes. Once the students are ready, teachers can distribute the flow chart with some blanks and ask the teams to fill in the blanks. The answers can be discussed.

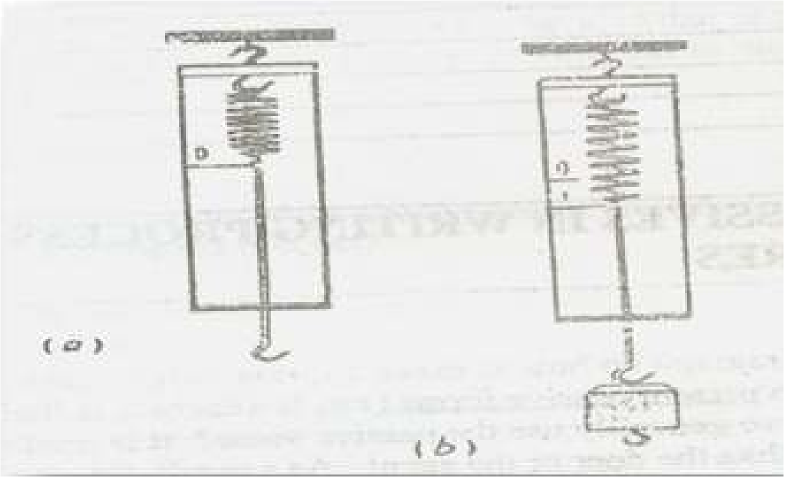

Teachers can also show some vocabulary / grammar exercises (e.g. A, B and C that follow the flow chart) on the power point slides and can ask the students to come out with answers.

Passage

Extraction of gold

Scan the following passage quickly to identify the types of mining and the ways of obtaining pure gold.

The method of mining gold varies with the nature of the deposit. Two types of deposit can be considered here: one is placer deposit, which refers to the occurrence of gold in particles in the sand or gravel in the bed of a river; the other is lode mine which refers to gold occurring in veins in gravel or rock. In placer mining, the separation of gold from gravel or other impurities is done by sifting. Hand pinning is also common, in which water and gold-containing gravel are swirled in a pan. Gold, being heavy, settles down, and the gravel is washed away. In lode mining, shafts are dug into the rock following the veins of gold. Using explosives, the rock is broken and the ore is obtained. The ore is then transported to mills.

In milling, the ore is first crushed using heavy machines. This is followed by sluicing, that is, using water to wash the ore into sluices or artificial water-channels in which there are grooves which trap the gold.

There are three ways in which this gold is treated to obtain pure gold. They are floatation, amalgamation and cyanidation. In the first method, a frothing agent is added to produce foam. A collecting agent is used to produce a film on the gold, which then sticks to the air bubbles. Gold is then separated from the top. In amalgamation, the ore, mixed with water to form a pulp, is collected on a copper plate covered with mercury. The mercury is then removed, partly by squeezing it out and partly by distillation. The cyanide process is now widely used. In this process, a weak solution of sodium, potassium or calcium cyanide is used to dissolve the gold. The gold is then precipitated by the addition of zinc crust.
The gold thus obtained is melted and cast into bars.
(source : English for Engineers and Technologists, 1990)

Now discuss the passage with your team-mates and complete the following flow-chart:

Extraction of Gold

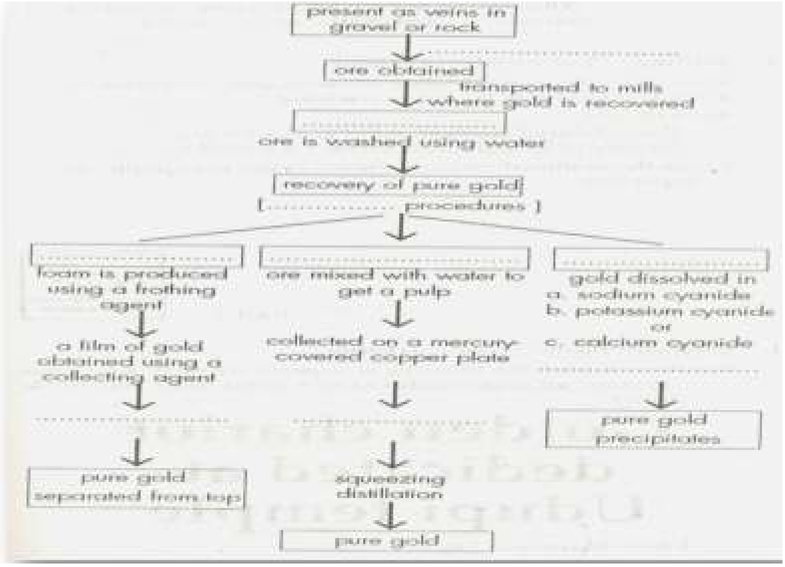
present as veins in gravel or rock
ore obtained
transported to mills where gold is recovered
ore is washed using water
recovery of pure gold
[.............. procedures]
foam is produced using a frothing agent
ore mixed with water to get a pulp
gold dissolved in
a. sodium cyanide
b. potassium cyanide
or
c. calcium cyanide
a film of gold obtained using a collecting agent
collected on a mercury-covered copper plate
pure gold precipitates
pure gold separated from top
squeezing
distillation
pure gold

Team-task

'Extraction of gold’

Scan the following passage quickly to identify the types of mining and the Grammar

Exercise 1

Exercise (A)
Here is a paragraph describing gold. Put in adjectives from the list below to fill the gaps in the paragraph. The words and phrases should help you.

precious expensive indestructible prevalent unique
exquisite exceptional excellent criminal

Gold is _________ among metals since it possesses certain properties not found in any other metal. It is a rare metal with a beautiful yellow colour. It is not affected even by strong acids. The only liquid which can dissolve gold is a mixture of hydrochloric acid and nitric acid; one can, therefore, say that gold is nearly ___________. It has certain ____________ qualities which make it an __________substance for jewellery. Skilled goldsmiths can make gold ornaments of ____________ Workmanship. Gold jewellery is ___________and people often show off their wealth by wearing ornaments of gold. Some people collect gold for its own sake. Gold, being a _________metal, inspires man's greed. It gives rise to _____________acts like theft, robbery and even murder. Another crime that is _________________in India is the smuggling of gold into the country.

Answers: unique, indestructible, exceptional, excellent, exquisite, expensive, precious, criminal, prevalent

Exercise B

Some nouns are formed by adding suffixes to adjectives or verbs. Some of the common endings used to form nouns are –ity, -cy and –ce. Add the appropriate endings to the following adjectives to make nouns.

rare, impure, indestructible, ductile, important, reliable, malleable, abnormal frequent

Answers: rarity, impurity, indestructibility, ductility, importance, reliability, malleability, abnormality, frequency

Exercise C

You must be familiar with the words in column A by now.
Match the words in Column A with their meanings in column B.

Column A	Column B
(I) Extraction	a. Group
(ii) Convoy	b. Bringing together
(iii) Flotation	c. Suffering
(iv) Salvage	d. Process of treating something with cyanide compound
(v) Stagnant	e. Remaining on the surface
(vi) Amalgamation	f. Taking out
(vii) Distress	g. Rescue
(v) Stagnant	h. Not moving or change

Conclusions

As enumerated through three important aspects of science and technology namely definitions, descriptions and processes, writing skills are vital for students of science and technology. In order to make the writing process more interesting and simpler for the students of science and technology it is necessary to adopt the task-based approach in the EST classroom. Beginning with the theoretical discussion, the teacher can provide examples after inviting examples from students. Then tasks – individual, pair or group- can be initiated to apply the theory discussed. The task-based approach can also be used for teaching some aspects of language such as grammar and vocabulary also. Ultimately this task-based approach will lead to learner autonomy as the students are involved in discussion and feel interested in the tasks such as listening, reading, speaking, observing, demonstrating and brainstorming.

References

Andrews Deborah C. and Margaret D. Bickle, Technical Writing: Principles and Forms. Macmillan Publishing Company (1982) p.136

Chalak Azizeh and Zahra Norouzi, Rhetorical move and verb tense in abstracts: A comparative analysis of American and Iranian academic writing. IJLS, Vol.7, No. 4, October 2013 p.101

English for Engineers and Technologists. Humanities and Social Sciences Division, Anna University, Chennai. Hyderabad : Orient Longman. 1999. p.02, 23-25, 65

Nagaraj Geetha. Comprehend and Compose.2003. Foundation Books. New Delhi. pp. 20-21

Gerson Sheron J & Gerson Steven M., Technical Writing, 3rd Edition, Pearson Education Asia, 2000, p. 68

Houp, Kenneth W., et.al. , Reporting Technical Information, 9th Edition, 2002, New York, OUP, p.137

Mishra Sunita and C. Muralikrishna, Communication Skills for Engineers, 2004, New Delhi, Pearson Education. p.221

Pedro Luis Luchini. Evaluating the effectiveness of a complimentary approach to teaching writing skills. IJLS Vol.4 Issue 3, July 2010, p. 73-74

Rutherford Andrea J, Basic Communication Skills for Technology, Second Edition, Pearson Education, New Delhi, 2001 p. 76-77

Stevenson Susan and Steve Whitmore Strategies for Engineering Communication. John Wiley Sons Inc., 2002 p.03

International Journal of Humanities in
Technical Education
Volume 1 | Issue 1 | January, 2015

English in India[3]

Kapil Kapoor[4] & R. S. Gupta[5]

A lack of certainty, a certain scepticism and a certain degree of concern has always marked the attitude of the Indian intelligentsia towards English ; witness, for example , the phrases that recur in debates and declamations about English-'Indian English', 'English in India' , 'role of English in India' , 'function of English in India' etc. another set of phrases captures the changes that English has been undergoing in its used by Indians - 'Indianization of English', 'indigenization of English', 'varieties of Indian English', 'standards of English in India' etc. The two sets appear to coalescence and lead to the overwhelming question-'What is the future of English in India?' which perhaps is another way of asking 'what future the Indian intelligentsia would have sans English?'

For a language used by hardly three percent of India's vast population, it is amazing that English has generated so much interest, anxiety and controversy. And yet it is not so amazing after all when we recognize the fact that this three percent of the population means that over twenty million Indians learn and use English, succeed through English and so have a vested interest in the continuation of English in India. It is even less amazing when we realize that this three percent constitutes India's 'elite'-people who are at helm of affairs in practically all spheres of national life and polity.

A host of people belonging to diverse professions have expressed themselves on 'the English questions' right down from the middle of nineteenth century. Scholars, journalists, political leaders, educational planners and pedagogues have addressed themselves to specific issues and taken definite positions on the spread of English in India, the form and function of English in India, the teaching and learning of English in India and the future of English in India. These studies-books, articles and public addresses-far exceed in volume and variety anything that has been written about any other language in India, and may be classified under four heads: socio-historical, structural/descriptive, pedagogical and literary. These pronouncements have had the cumulative effect of crystallizing the different dimensions and issues involved viz. (i) how English came to be introduced in the subcontinent and how it acquired its present superior status and extended functions; (ii) how English relates to major Indian languages in India's language policy, in education, in business and administrations and in mass media; (iii) how a kind of Indian English has developed which differs from standard British English in phonology, lexis, syntax and in discourse picture (iv) how English has interacted with Indian languages and influenced, in particular, their lexis and syntax; (v) how English language as the vehicle of a powerful literature has had impact on literatures in Indian language in terms of themes, forms and poetics; (vi) how a relatively modern Indian literature has grown up in English, and finally (vii) how English is linked with contemporary Indian reality-the power structure and social structure that obtain in India today.

---

[3] With authors' due permission, this paper has been reprinted from their book English In India: Issues and Problems, published by Academic Foundations.

[4] Retired Professor, Centre for Linguistics and English, Jawaharlal Nehru University (JNU), Delhi

[5] Professor, Centre for Linguistics and English, Jawaharlal Nehru University (JNU), Delhi

If one were to describe the structure of the situation of English in India, one could perhaps do so in terms of a functional grammar- the subject, the object, the instrument, and the event. The British rulers ('subject') used the English language ('instrument') to consolidate and expand their powerbase in India ('object'). The instrument was used to establish, enhance and sustain their political, intellectual and cultural supremacy over the natives. The instrument was employed in the setting of education and administration, the former being purportedly used to create a class of English-knowing Indians who could functions as interpreting buffers between the rulers and the ruled, as well as act as minor functionaries and emissaries for the rulers. It is perhaps ironical, though understandable, that while the British were divided over the desirability of initiating the natives into the mystic of the English language, the native Indians themselves demanded that they be taught English and given western education, thereby giving early evidence of Indians' all-too-ready willingness to cut themselves adrift from their own self for the sake of immediate gain. The process of English education, having once begun, brought in its wake the inevitable sequence-from the king to the court to administration to education and thence to literature and culture and to the drawing-rooms of the privileged few. This was exactly the path that Persian and Arabic had followed earlier in India, and Arabic had followed earlier in India, and Latin and French had followed in an earlier-day England. The British employed the instrument methodically and purposefully and succeeded in.

1. (1) Creating a well-defined an easily recognizable class of English-knowing natives,
2. (2) Distancing themselves from the large masses of non-English knowing people and, most importantly,
3. (3) Creating a division between the English-knowing natives and the non English-knowing masses, thus creating, as it were, two nations within one.

In the event, the Indian society which has already been riven along several parameters now had one more divisive element to contend with. The division, based on once access to English, tide in beautifully with multi-layered, hierarchical pattern of Indian society which not only accepted the new division but set about rather energetically to perpetuate, so much so that forty years after the departure of British, the knowledge of English has become the major dividing line between the haves and the have-nots. It is interesting to see how the multi-level Indian society thrives and sustain itself on the same 'myth' of the inherit power and the superiority if English that the British 'traders-invaders-rulers' had believed in and cultivated.

A look at the multi level setup in any sphere of our national life would show that English appears right at the top. A brief survey of the sphere of education revels that the lowest level of primary/basic education fifty-two languages are used as medium of instructions. This number is progressively reduced as we move upwards along the education ladder till we are left with twelve languages that are used as medium of instruction at the under graduate level. As one move to the post-MA courses and the institutes of science and technology, on finds that the only medium of instruction that remains is English. Thus, we have a kind of pyramidical structure where native Indian languages are progressively eliminated at each successive level as one moves upwards, till the apex is reached where there is room only for English. The same is true in the sphere of legal administration and the court of justice: we have vernaculars (regional Indian languages or state language) being used in lower courts, English and state-languages being used the higher courts (even here the judgments are delivered in English), and only English being used in supreme court-by the litigants, the advocates and the judge for the plaints, arguments and judgments. As a matter of fact, while the constitutional status of English is that of associate official language, and Hindi and other regional languages are designated as national official language and state official languages respectively, it is English that is ipso facto the language of education, administration, law and justice at the highest level. Has this situation come about or has it been brought about? A similar multi-level function allocation of languages can be seen in individual behavior too. A multi-lingual educated Indian (meaning thereby an Indian ' English –knowing Indian) uses his native mother–dialect with close relatives and in intimate family circles, he uses the major regional language while interacting with the 'ordinary folk', acquaintances, vendors and traders, but when he enters a deluxe super-market or the lobby of a five star hotel he uses English. If he travels by bus or by ordinary railway coach he uses one of the regional languages, but when he travels first-class or on a plane he uses English and nothing but English

Thus , in the course of its spread English has been transformed for the people for whom it was originally an alien language, as it is argued, into their 'own' language of inter-regional communication, a link language, a lingua franca, a language of education and culture and the language of power and social control. It has thus outstripped not only 1652 native Indian mother-tongues, not only 15 major Indians languages listed in the VII scheduled of the Indian constitutes, but also Hindi which is the language of vast majority of Indians, and also the National Official Language. The language of the 'babus' has come a long way. It is now the language of the elite. It has become the source and token of prestige, power, success and social superiority. No major Indian language today has the same 'paying potential' as English in every sphere of life: in trade and in commerce, in administration, in education and in science and technology. Everywhere the highest echelons are mannered by those who wield English, and in order to enter these 'hollowed upper reaches' one must possess a particular command of, and fluency, in English. The mystique of English has created yet another class of people in India – of the toddlers and the youth who struggle to learn English, who are cajoled and cudgeled by their parents, guardians and sponsors as well as by their own driving ambitions to learn English. The situation (the 'event' of our functional grammar) can be simply stated thus: you cannot become a doctor, a scientist, a technocrat, a top level business executive or a high ranking bureaucrat if you do not know English. Time was when English was referred to as the 'window to the world'. Now English is simply and unequivocally to continue the metaphor, the door that opens out and success and social control.

However, there are also signs that the great monolith is developing cracks. In recently years these cracks have appeared and widened. The cracks refer to newly emerging evidence in education that the insistence of English is gradually decreasing. Post- graduate studies in humanities and social sciences as well as, in the agriculture sciences are now possible through the medium of some of the major Indian languages; it is now possible to compete for and enter the Indian Administrative services without having to meet compulsory standards in English; middle-level jobs in commerce and industry are opening up for those who know little or no English. There is another way in which the cracks in monolith are surfacing. Those who wield power in mass-media are fast becoming aware of the vast potential of Indian languages, culture, folk-lore and mythology which are exploding across the small-screen, in comic strips through children's literature. The English-knowing elite in the business of mass-communication are going back to the Indian roots and this trend, if it continues, will bring about sure change in the Indian psyche and erode other power-base of English in due course of time. In this connection, it is interesting to note that Jawaharlal Nehru's “the discovery of India” which was originally written in English, has in 1989 been bringing lessons in Indian history to millions of T.V viewers in Hindi. We think this signifies much more than a telecast in Hindi of a book originally written in English; it means a rediscovery of Indian history, Indian values, Indian ethos and reassertion of Indian identity, as well as, an affirmation of faith in the living Indian languages. This is significant, particularly so in a set-up where English newspapers, English journals and, indeed, anything printed in English is automatically unquestioningly taken as being somehow more authentic, more reliable, more unbiased and more 'sensible'. There are, thus, indications that the Indian languages will soon emerge and rightfully, assert their claim not only to parity with English, but as potentially viable alternatives

While the spread of English in India and its extended domains of uses are natural consequences of the given historical process, its importance has been blown out of all proportion by various education commissions and committees of educationists and planners who, in their sage pronouncements, have seemed to equate English with learning and a knowledge of English with excellence in education. These recommendations and pronouncements have had the effect of making it incumbent on every aspirant to a university degree to pass a least qualifying public examination in English. An idea of the governmental support to English can be had from the following facts. There are in India three central institutes for languages; Central Institute of Indian Languages (Mysore), Central Hindi Institute (Agra) and Central Institute of English and Foreign Languages (Hyderabad). The three institutes and their names reflect the official recognition of the special status and importance of English. While one institute is devoted entirely to Hindi, and one looks after all Indian languages other than Hindi, the third institute is meant primarily for English and only secondary to some foreign languages. For the administration and language planner in India, English thus is neither an Indian language nor a foreign language on the other. As an interesting aside, one might mention here that if one wishes to learn a foreign language at one of the major Indian universities one has to sit for an entrance examination in which one is, in addition to the other things, tested for one's proficiency in English. So one must know English if one wishes to learn Spanish or Chinese or German or French or Russia.

Thus, the present position of English in India is as follows: it is a non-Indian language which is recognized constitutionally as the associate national Official Language and as regional link language; educationally it is recognized as an essential medium of learning, with specialized education in science and technology available through the medium of English only; socially it is recognized and upheld as a mark of education, culture and prestige. The polity and society confers great value on learning of English, gives it enormous paying potential, thus creating a great demand for English-knowing Indian bi-/multilingual.

What have been the effects and consequences of this growth? One can talk of two-fold consequences-those, in which English is the agent, and those in which English has been the patient. As an agent English has been at the heart of several myths – that it is a 'unifying' factor, that it is an 'enriching' factor (for culture, literature etc.), and that it is a 'rationalizing' force (for the essentially 'superstitious' Indian society) and that it is a 'modernizing' force (for the essentially 'backward Indian society). This being so, English has magical powers like the ancient mantras or Rks whose correct enunciation alone would procure merit, and therefore English has to be learnt exactly and accurately, with extreme care and unceasing effort, though all this may finally prove to be futile, for in the ultimate analysis how can mere mortals (the black or dark race) acquire the language of gods (the white race). No wonder, the entire vocabulary of English language learning and teaching is loaded to suggest the 'difficulties' for the learner, and a major part of E.L.T. research is devoted to 'errors' and 'deviations'.

'

English is our window on the world'- this is one of the most well-thought out epithets that has tremendous psychological appeal for a people whose climate allows them to let the fresh air and sunshine enter into their homes. There is little doubt that in the field of different human activities, especially in science and technology, comes to us in and through the English language;

at the same time it is equally doubtless that much of what we get in English is a translation from other European languages. It is often said that the latest books are available in English alone. True, but then these books are accessible to a few Indians only. Now, with a certain degree of national effort the 'latest knowledge' could be made available in major Indian languages (witness for example, what happens in Russia or in Japan by way of immediate translation of all that is new and useful into the Russian or the Japanese language). Moreover, new windows are opening up, new doors in fact.

Then, there is the dangerous myth that would have us believe that English somehow makes us more rational and logical and allows us to see things in the cold light of reason, whereas the Indian languages are somehow more emotive, given to flights of fancy and exuberance. This myth is worked out in several ways, one of which is the modern linguistic analysis of discourse. Now reason and emotion are two strands of the human mind and language merely articulates them, it does not create them. In the history of Indian thought one can clearly attest in the evolution of 'scientific' reasoning in the sense of theory building from the time, at least, of Yaska, the ninth century B.C., with the advent of Buddhist reasoning, the Indian mind moved definitely from ritual to reason. Finally, the work of Panini (seventh century B.C.) is unparalleled for its logical analysis and reasoning. Seen in this light, cultivation of myths such as this particular one, appears part of the grand design to induce amnesia in the Indian people, a state of forgetfulness about their true self and heritage.

Then there is a myth that English is the link language that provides a communicative channel for the Indians belonging to diverse linguistic religions to interact. The ground reality is that when one travels from Kashmir down to the southern-most tip at Kanyakumari, the communicative link is best maintained through a form of Hindi rather than through English. This myth of English being the link language does not account for that 97% of the Indian population that does not know English. Also, while in the big urban centers one could possibly talk of English as a communicative link since most urbanites are familiar with English lexical items (several of which have been assimilated into Indian languages), the rural masses communicate only through some form of Hindi and local dialects. One can state the obvious by saying that boardroom interaction, seminars and conferences use English as a communicative link, but that does not make English a pan-Indian lingua franca or a common denominator for a nation about 800 million people of which only twenty million know and use English for official exchanges, but in a majority of across-the-counter negotiations and public dealings the lingua franca is not English but the major regional languages or a mixed form of Hindi. Our contention is that at best English is the elite's lingua franca, at worst, it is not a lingua franca at all.

The long contact between English and Indian languages has had the inevitable effect of linguistic convergence. This has manifested itself in different ways. One effect has been the so called Englishization of Languages in as much as certain linguistic features of the English language have crept into Indian languages, leading to certain phonological and syntactic adjustments. Conversely, English itself, through the prolonged contact with Indian languages, as well as, due to its use by Indians with varied linguistic background and varying levels of competence, has been 'Indianized', in as much as there have been phonological and morpho-syntactic adjustments in English, adjustments that can be attributed to the influence of Indian languages and cultures. Both these processes, the Indianization of English and the Englishization of Indian languages, have received considerable scholarly attention the details of which we need not go into at this point. A third dimension of the linguistic contact and convergence has been the emergence, wide-spread use and acceptance of mixed codes of usage wherein English words, phrases and even clauses are freely inserted into sentences which have the general grammatical matrix of one or the other Indian Language. Thus, mixed Hindi-English or mixed Bengali-English or mixed Tamil-English is commonly used by bilinguals who have some degree of proficiency in English. The use of mixed-codes characterizes the verbal behaviour of a large majority of educated/semi-educated Indians in different domains. This has had the consequence of making English much more functionally relevant as far as day to day common usage is concerned. This has also led to the percolation of English words and phrases into the speech of those sections of Indian society which otherwise do not learn or use English.

The use of English by a large number of Indians hailing from diverse linguistic backgrounds has also resulted in the emergence of regional varieties of English. As a matter of fact when one talks of varieties of Indian English, one has in mind two dimensions: on the vertical scale there is, at the top, educated Indian English which is remarkably free of regional influences and is a close approximation of Standard British English. As we move down the vertical axis there are varying degrees of competence shown by Indian users of English, ranging from a standard Indian English to a rather pidginized version that may be called bazaar English. On the horizontal axis we have regionally marked varieties of English with discernible and describable phonological and syntactic features. Thus, we have Bengali-English, Punjabi-English and Tamil-English etc. these variations along the vertical and horizontal axes are significant since they point to the fact that no mono-model description of Indian English is possible, except if one were to describe the speech of highly educated, cultivated users of English; but then their English would approximate so closely to Standard British English that it would hardly qualify to be designated 'Indian English'.

Yet another consequence of the spread and growth of English in India has been its enduring influence on Indian literatures. This influence can again be said to have two dimensions. One of these is the influence of English literary practices on Indian writers during the last hundred and fifty years. This has led to the emergence of new forms, new themes and a new critical idiom which, in turn, has led to the reshaping or urban Indian literatures. The second dimension of this influence is the rise of a new breed of Indian creative writers who have chosen to write in English rather than their own mother tongue. The creative efforts of these writers have given rise to a considerable body of writing that is generally referred to as 'Indian writing in English' or as 'Indo-Anglian literature'. This body of fiction, drama and poetry has a rather anomalous position in that it is suspended, as it were, half way between being either English literature or Indian Literature. Within the Indian setting it is not recognized as Indian literature and is taught in the departments of English only: outside India it is not recognized as English literature, and forms part of what is loosely and derogatively referred to as 'third-world literature in English'. The fact however, remains that some very fine creative writers have chosen to write in English, a medium that is not native to their soil and their psyche and which imposes its own constraints and limitations on their creativity. One of the spin-offs of this creativity has been that the Indian mind has increasingly tended to perceive and evaluate literature in terms of categories derived from the western critical traditions, and also that some of the recent trends in Indian literatures seem to emanate directly from and follow western trends which are disseminated largely through the medium of English. This has also had the less than salutary effect of pushing into the background Indian literary and critical theories and practices, at least as far as the educated Indian intelligentsia is concerned. Of course, those steeped in the Indian classical tradition are ever endeavouring to revive and enrich it, but the places of institutionalized learning are more enamoured of the western traditions and practices. Thus, even those writings that are truly Indian in themes, treatment and ethos, are analyzed and characterized in terms of western categories, this tends to give the whole creative and critical endeavour an air of unreality.

The most important aspect of English in India, to our minds, is the two fold rupture it has caused among Indian scholars and thinkers – one in relation to the traditional Indian scholars and thinkers who are generally away from the major urban 'cosmopolitan' centres of learning, and the other in relation to Indian intellectual tradition. In this way, it circumscribes the modern intellectual activity. This is all too evident in Indian university scholarship which remains, by and large, derivative. Above all, it precludes, to use a Yeatsian phrase, 'a dialogue between self and soul'.

References:

Bansal, R. K. 1972 Spoken English for India, A Manual of Speech and Phonetics. New Delhi, Orient Longman.

Bansal, R. K. 1976 The Intelligibility of Indian English. Monograph No. 4, Hyderabad, CIEFL.

Bhatia, K. C. 1967 A Linguistic Study of English Loan-Words in Hindi (in Hindi). Allahabad, Hindustani Academy.

Clark, T. W. (ed.) 1970 The Novel in India : Its Birth and Development. Berkley and Los Angeles, University of California Press.

Edwards, John. 1985 Language, Society and Identity. Basil, Blackwell.

Gokak, V. K. (ed.) 1957 Literature in Modern Indian Languages. New Delhi, Publication Division, Government of India.

Gokak V. K. 1964 English in India. Bombay, Asia Publishing House.

Gumperz, J. J. 1982 Language and Social Identity. Cambridge, Cambridge University Press.

Howell, A. 1872 Education in British India Prior to 1854 and in 1870-1. Calcutta.

Iyenger, K. R. Srinivasa. 1962 Indian Writing in English. Bombay, Asia Publishing House.

Kachru, B. B. 1983 The Indianization of English. New Delhi, Oxford University Press.

Kanungo, G. B. 1962 The Language Controversy in Indian Education. Chicago, University of Chicago.

Kapoor, Ranga. 1972 Time Reference in Indian English : A Study of Newspaper English. Unpublished M. Litt. Dissertation, University of Delhi.

King, Bruce. 1962 Modern Indian Poetry in English. Bombay, Asia Publishing House.

Lannoy, R. 1971 The Speaking Tree : A Study of Indian Culture and Society. NY, Oxford University Press.

Law, N. N. 1915 Promotion of Learning in India by Early European Settlers. Bombay, Longman, Green & Co.Loveday, Leo. 1982 The Socioloinguistics of Learning and Using a Non-Native Language. Pergamon Press.

Machwe, Prabhakar. 1978 Modernity and Contemporary Indian Literature. New Delhi, Chetna Publications.

Mahmood, S. 1895 History of English Education in India. Aligarh.

Mishra, V. 1963 The Influence of English on Indian Languages and Literature (in Hindi). Dehradun, Sahitya Sadan.

Mohan, R. (ed.) 1978 Indian Writing in English. Delhi, Orient Longman.

Naik, M. K. 1970 Indian Response to Poetry in English. Bombay, Macmillan & Co. Ltd.

Nihalani, P., R. K. Tongue and Priya Hosali. 1979 Indian and British English: A Handbook of Usage and Pronunciation. Delhi, OUP.

Panikkar, K. M. 1920 Essays on Educational Reconstruction in India. Madras, Ganesh.

Pattanayak, D. P. 1981 Multilingualism and Mother Tongue Education. Delhi, Oxford University Press.

Platt, J. H. Weber and H. Lian. 1984 New Englishes. London, Routledge & Kegan Paul.

Quirk, R. S. Greenbaum, G. Leech and J. Svartik. 1985 A Comprehensive Grammar of the English Language. London, Longman.

Rayfield , J.R. 1970 The Language of Bilingual Community . The Hague, Mouton.

Report of the Indian Universities Commission (1902) 1902 T. Raleigh (Chairman) Simla : Government Central Printing Office.

Report of the Official Language Commission (1956) 1956, B.G Kher (Chairman) New Delhi: Government of India Press.

Report of Post-War Educational Development in India (1944) Jogendra Singh (Chairman) Calcutta : Superintendent, Government of Printing.

Verghese, C. Paul.1971 Problems of the Indian Creative Writing in English. Bombay, Somaiya Publications.

International Journal of Humanities in Technical Education
Volume 1 | Issue 1 | January, 2015

Towards Interdisciplinary Studies and New Humanities in University in India[6]

Avadhesh Kumar Singh[7]

> Ekam Shastram adhiyano na vidhya shatra nischayam!
> Tasmat bahushrutah shastram bijaniyach chikitsaha!!
>
> **-Sushruta**

> Every science is a system in its right; … we must … set to work architectonically with it as a separate and independent building. We must treat it as a self-subsisting whole and not as a wing or section of another building – although we may subsequently make a passage to and fro from one part to another.
>
> **-Immanuel Kant**

> Everyday life, in a sense residual, defined by 'what is left over' after all distinct, superior, specialized, structured activities have been signaled out by analysis, must be defined as a totality. Considered in their specialization and technicality, superior activities leave a 'technical vacuum' between one another which is filled by everyday life. Everyday life is profoundly related to all activities, and encompasses them with all their difference and their conflicts; it is their meeting place, their bond, their common ground.
>
> **-Henri Lefebvre**

---

[6] With author's due permission, this paper has been reprinted from his book *Towards Interdisciplinarity* published by Creative Books, New Delhi

[7] Professor, School of Translation Studies and Training, IGNOU, New Delhi.

Lead In

Before discussing the issue of interdisciplinary studies in the existing humanities and social sciences and their relevance in 21st century, it must be borne in mind that the relevance is a consequence of applicability, relatedness and rootedness of the discipline concerned. Its rootedness is to be seen in terms of its concerns for human condition, experience and its dimension, relevance in local (regional, national and international) and global terms, and applicability in terms of the use of acquired knowledge in making the learners reasonably good human beings individually and collectively and their employability in terms of acquisition of skills and their use in earning livelihood and financial sustenance. Moreover, it would be congruous to see the whole issue in the perspective of evolution of the institutions of university, and disciplines of knowledge like humanities, social sciences and interdisciplinary studies in them.

The journey of the university from 'corporation' to 'corporate house' which has led to the commodification of education in the present century makes an interesting reading particularly in the Indian context. It has brought about change in the character of university education. In its traditional concept, it was supposed to be dedicated to the pursuit of knowledge for the sake of it. In the course of time universities had to give up their elitist character based on values, and the focus shifted to utilitarian aspect, and service to society became central in this phase. Now, university is a producer, wholesaler and retailer of knowledge; education is a knowledge industry. Moreover, there is a change in character of communities of teachers and students. Students do not come to the university for becoming 'gentle (wo)men' but for making their careers, and teachers join teaching not for service subscribing to the ideals of voluntary poverty but as a profession and career.

In the Indian intellectual tradition, knowledge was always considered in integrated or interdisciplinary manner. The typology of knowledge systems or domains was prepared without privileging any school or tradition of articulation. The provisionality of truth was stated in the fact "*Ek sad viprah vahudha vadanti*." ("The truth is one, though articulated in different ways by wise people"). Secondly, the Indian knowledge culture sounded caveat against jumping to conclusion on the basis of study of just one domain of knowledge. And all disciplines of knowledge aim at study in specialization, but qualified by the concept of *patrata* (competence) or *adhikar* (worthiness) that are pre-requisites for study before entering the subject and knowledge of other related domains or disciplines. Equally important is Bhartrihari's caveat against insularity in *Vakyapadiya,* as he underscored the importance of knowing other traditions-other than one's own:

> The intellect acquires critical acumen by familiarity
> with different traditions. How much does one really
> understand by merely following one's own reasoning
> only?
>
> (*Vakyapadiya* 2.484)

Different traditions here include knowledge systems and disciplines from different lands. However, Bhartrahari's words of wisdom do not seem to be reflected in Indian higher education in which, leave aside the question dialogic interaction among different Indian and traditions, -- Indian knowledge systems/traditions do not find respectful space for them.

Indian university system that has expanded multifold in the last two decades of the preceding century tilted in favour of science and technology. The national Gross Enrolment Ratio (GER) at present is said to be around 12 percent (Akshaya Mukul, India's Vision 2010' in Sen 9) which means 88 percent of the total youth in the age group of 18 to 23 is outside the system. It further means that the youth from the tribal and rural areas are the most deprived lot. The GER in the four tribal districts of South Gujarat is as about 4 %, according to an estimate. If this chasm gets further aggravated, it would create imbalance in terms of social opportunities and development that would be limited to the few against whom many would react, leading to social disorder. Moreover, a large number of students are in arts and commerce faculties. This imbalance was further augmented in the last decade, as hordes of students followed courses in engineering, medicine, and management like the pied pipers to such an extent that the departments of pure sciences like mathematics, physics, statistics are fighting for their survival in terms of quality and number of students, as the so called meritorious ones, given a choice, go for professional and vocational courses.

In an age of ICT revolution, science and its tangible accomplishments have privileged scientific method to such an extent that there is an increasing insistence on employing the scientific method in other spheres of life. Against the dominance of scientific method and truth, other truths—poetic/literary, and philosophic, have been marginalized in the academic spheres. The votaries of science and technology do not consider studying and teaching of humanities and fine arts as the integral aspects of teaching and learning, and they do not receive even step-brotherly/sisterly treatment which is reserved for social sciences; consequently, the funding for them has dwindled considerably. The present education system in India is so science and technology intoxicated that the planners and their subscribers obviate the limitations inherent in the system and method, and ugly consequences that it might lead us to. Interdisciplinary studies can help in balancing the imbalance, but accepting IITs and IIMs and institutions they are not pursued methodically in conventional universities.

In conventional universities in India we are not doing even humanities, social sciences or natural sciences in their true sense, leave aside the question of doing New Humanities, inter or multi-disciplinary studies. The problem is further aggravated by lack of motivated students who come to Arts Faculty which includes Departments of languages like Assamese, Bangla, Hindi, Gujarati, Malayalam, Marathi, Oriya, Punjabi, Tamil and Telugu and departments of social sciences like Economics, Sociology, History, Political Science, are necessarily not those who are there by choice, but out of choicelessness and compulsion, as most of them have no place to go. Departments or Schools of Liberal Arts (human sciences) are relatively new and a few, and have come in existence as a copy of the American model, and not in response to new challenges and in view of Indian realities. The servile subscription to the American model would amount to becoming the intellectual weathercocks.

Languages/Literatures in Indian University System

Human beings move towards certain sort of absolution (*purnata*) in terms of organic composition of physical, emotional, intellectual and spiritual selves. Science caters largely to intellectual aspect; humanities (literature), social sciences and value-oriented education (liberal arts) to others as well. The nurturing and maturity of emotions is as essential as development of intellect. Indifference towards emotional aspect would make machines out of wo/men, and cause anarchy in society. Another casualty of this imbalance is concern for cultivating and nurturing values in higher education. Fortunately, value-oriented education that was considered a waste of time and intellectual luxury is at least being discussed, if not fully implemented, in Indian academic circles. Value-oriented education hinges on human beings, human values and values of life in living, and even non-living objects. That is what spiritual [adhyatmik (in one sense *adhi*=transcend or beyond, *atmik*=self)] educational aspect of value-oriented education informs us. Human beings become inhuman when they cease to think beyond themselves.

Multiplicity and pluralism along with thinking beyond self come naturally to India. It has lived for so long in various fields here that singular number exists only in grammar. In Indian culture, there is no singular number. Singular is plural in Indian cultural practice. Be it the concept of time or system of belief or modes of worship, plurality has become an integral part of collective Indian consciousness. As a result, in its long, attested, continuous and cumulative tradition of knowledge, it constructed *shastra*-s on almost every conceivable human activity but did not ignore its holistic integrated consideration and its relationship with other disciplines of knowledge.[1] So the holistic integrated consideration based on interrelatedness of various manifestations of life and its activities involved some sort of inter-disciplinary studies, without conspicuous evidence of its methodology, that flourished its diverse linguistic, literary, social, cultural realities co-habiting the same space or Indian intellectual traditions that speak of embracing best thoughts from the world all over.[2] It informs us about limitations of knowledge of just one discipline coming to conclusion or taking decisions, as stated by Sushruta:

Ekam Shaastram adhiyano na vidhya shastra nischayam!
Tasmat bahushrutah shastram bijaniyach chikitsaha!!
(Sushruta Samhita, Sutra Sthan, Chapter IV, Shloka 7, 'Prabhashniya Adhyaya')

Sushruta asks us not to come to conclusion or decision by studying just one discipline. In fact, all major Indian knowledge texts scandalize the prevailing classification of knowledge systems, based on the Western taxonomy. The text like the *Ramanyana, Mahabharata, Gita, Natyashastra, Arthashastra, Tolkappiyam, Thirrukul*, and *Saundrayalahiri* exist at multiple levels and defy being categorised in one discipline or system.

Of all countries, India is the most suitable site for interdisciplinary studies. It has a long tradition of not only constructing *shastra* and but also of studying different *shastras* before coming to a conclusion and pronouncing judgement. The tradition of inter-relational integrated study from various perspectives in India provides suitable scaffolding for comparative/interdisciplinary studies which was ironically not used in the present education system.

Therefore, India needs to re-look at its existing language/literature study and teaching in its university system. Single language departments were established during colonial period, as the colonizers could not understand the fact that India did not have linguia franca, for the language of the region used to be the language of the people residing in the area in which more than one language easily. The single language departments continued to flourish in India even after its independence against linguistic and literary realities of the country in which citizen, apart from his/her language, know and can operate in more than two languages. In view of this fact, the single language departments are a cultural crime in the country. Comparative study of literatures of Indian languages would have lessened the gravity of the insulation, caused by single language departments. But baseless apprehensions and interests of faculties employed in departments did not allow comparative study of literatures to prosper or alternative system of multi-literaturality to succeed. For instance, Gujarat University, Ahmedabad (Gujarat) introduced the concept of School of Languages with Departments of Sanskrit, Gujarati, Hindi, English, and Linguistics as the parts of it. The students could join one department of literature/language of their choice, and had the option of choosing subsidiary papers from other departments/literatures, and thereby could compare and be free from the insularity of one literatures. A distinguished writer and scholar like Umashankar Joshi envisioned and practiced comparative study of literature in this manner. However, this model collapsed not because of the burden of its ideals but because teachers could not arrive at commonly acceptable time-table.[3]

On the other hand, in the last two decades, departments or schools of comparative literature have into existence at least in some new universities. Hence, the destination called CL was reached, albeit belatedly, not out of conviction but out of compulsion, as the governments/universities cannot afford many single language departments with five or six faculties in each. So having one department or school with one faculty each for a language/literature is a cost-effective proposition. The model was destined to fail like many cases of academic miscarriage in the country, mainly because faculties, recruited in departments of comparative literature, were from single language departments without any training in the methodology of CL or commitment to CL. As a case for study, a new university like North Maharashtra University, Jalgaon started Department of Comparative Literature in it. All good intentions failed at the level of implementations, as within a few years all departments moved in the direction of single language/literature department, for the faculty come from single language department from affiliated colleges and other university departments. Lack of feasibility and employment opportunities for students are mere excuses forwarded by teachers who are neither exposed nor trained to practice comparative study of literature. The absence of conviction and commitment in faculty members does not allow multi-literary sensibility of the students to prosper in the country.[4] Consequently, the teachers and students trained in such departments/schools at best do acquire knowledge or some competence for social transactions, and at worst develop perceptions by which they would perpetuate linguistics or literary difference. The issue is: if we cannot practice intra or inter-literary studies, can we the teachers of literature or humanities practice intra/interdisciplinarity? Before I conclude this section I must hurriedly add it here that in these failures, it is the teachers who have failed, not the methodology or relevance of comparative study of literature or interdisciplinarity.

Humanities, Social Sciences and the National Knowledge Commission Recommendations (2008 & 2009)

Against the background of interdisciplinarity, it would be congruous for us to examine the status of Humanities and Social Sciences in wake of the recommendations of the National Knowledge Commission (NKC) constituted by the Government of India, as it unconsciously rearranged the hierarchy of disciplines by foregrounding science and technology. As expected in the age of information and communication technology and explosion of knowledge, humanities and social sciences were marginalized in the Recommendations, The NKC in its report was almost silent about humanities, and social sciences were merged with sciences.

The NKC brought sciences and technology in the centre of its core concerns for its knowledge projects in the age of interdisciplinarity. The NKC took note of 'knowledge as one seamless entity', for which it subscribed to interdisciplinary studies and proposed to set up a National Science and Social Science Foundation (NSSSF) to suggest policy initiatives to make India a leader in the creation and application of knowledge, to ensure that sciences and technology are maximally used for the betterment of the lives of people, and to develop the scientific temper in the country. It meant well and sounded good, for surfeit of specialization leads to lopsidedness, and prepares skewed citizenry. Interdisciplinary studies on the other hand, facilitate broader understanding of all ancillary disciplines/areas. In the process it takes a note of social sciences in its proposal for NSSSF.

Unsurprisingly, humanities are altogether absent in the NKC's concerns and recommendations. By doing so, it oversighted the basic truth that science takes care of provision and humanities of vision. Both are essential for human existence, for humanities, by providing vision, make human beings different from other species. In the age of technology driven economy and society, it was natural that science and technology would be epicentral on the NKC radar, but that does not mean that humanities should altogether be written off. The NKC, like the university system, was supposed to attend to this lacuna, but failed to a large extent to do so, expecting a brief discussion of language (read English only).

It is also to be stated here that the present Indian university system has missed the opportunity of critiquing the tyranny of the existing methodology of study and research in social sciences. Coming as it does from the West, it strives to study human and social phenomena in terms of binary opposites an approach which is backed by differentiating intellect and supports adversarial relations pitching one against the other. Coincidentally, Indian tradition considers *abhedabuddhi* (non-differentiating intellect) superior to *bhedabuddhi* (differentiating intellect). The outward forms might appear to be different but there is the same element or spirit pervading underneath them. It would be nothing but an intellectual misfortune for the entire humanity, if this approach does not find space in Indian education system. The argument for Indocentricity of syllabi in Indian higher education with space for other system is not spurred merely by nationalistic/jingoistic emotionalism but by epistemological and social validity, for the ultimate end of educational pursuits, as in Indian tradition, is to further social harmony, not acrimony.

Humanities, moreover, are not so distantly related to ethical or value education which too finds no space in the NKC's considerations. The NKC proposed to make India a knowledge society with a place of respect for it in the 21st century. But the questions that we need to ask are: what is the objective o f knowledge society? Is it enough to be a knowledge society? To be a knowledge society is a noble end in itself. But is it the ultimate end? Also, for every end some price is to be paid? What cost is to be paid for this end? The question here is: what is the ultimate end of knowledge or life for that matter? The ultimate end of knowledge is happiness, i.e., well-being—material, physical and spiritual. It is ensured by eliminating or at least by minimizing dependence on external sources or factors for happiness. Happiness is freedom from the cause of pain which is a consequence of desire. But which desire should or should not be fulfilled? Who can help us in this situation? Humanities inform us about the difference between good and bad desires. Leave aside answer to the question, the question might be news in a knowledge society; only wisdom society based on value education asks and answers this question. The society cannot afford its stoic silence on value or ethical education. Professional education—management, medical and legal—shorn of value-based ethical education will create anarchy and valuelessness in the society, for valuelessness of professionals is more dangerous than that of armatures. The NKC's sincerity in charting our strategies for making India a knowledge society cannot be faulted, but it should have borne in mind the words of Plekhnov, Lenin's mentor, who, on being asked about the roles of arts and literature, is said to have remarked that as long as there is humanity, there would be stupidity. So long as there is stupidity, there would be need for art and literature. In other words, the fate of humanity is interlinked with humanities, though mere humanities would also imbalance the situation. The way out is not in blind lopsided centrality of either science or social sciences or humanities but in their integration and interdisciplinary studies depending on demand of the issue, not on whims or limitations of the learners, scholars, teachers or the system.

Employability

One of the cruel, yet harsh realities staring the present higher education is its inability to bridge the gap between general/liberal education and professional education and provides jobs or means of sustenance to the majority of students, if not for all, as officials are needed for running the state, economic and social systems. Universities now are sites of seeking and making careers for students. Hence, there is a demand for vocationalization and professionalization of education in general and higher education in particular. Unfortunately, not more than a small number of Indian degree holders are employable. According to NASSCOM-McKinsey Report, India produces over 3.1 million graduates, including 0.5 million technical graduates with about 35% being computer engineers. The increasing demand in many sectors notwithstanding, most of these technical graduates remain unabsorbed. Only 25% of these technology graduates and 15% of the general graduates are found suitable for employment.

Despite the glorious failure of the education system, it is the demographic density that keeps the institutions going despite the non-employability of their products. Earlier the higher educationists, in a typically ostrich-like manner used to state arrogantly that employment is the concern of state or economists, and not theirs. Now, employability or placement is one of the major criteria of success or failure of the institution, and their accreditation at inter/national levels. Gone are the days when employment or service was considered the meanest of all professionals. In the northern Indian folk lore, the following saying attribute to Ghagh speaks about the low status attributed to job: '*Uttam kheti madhyayam van/Nishidh chakari bhikh nakam'*. It states that the best of all professions is farming; doing business is the next to it. Doing job with someone is low but the worst of all is begging alms. The highest position attached to farming suggests that the hierarchy of professions must have been prepared in an agrarian society in which there was no fierce competition among the many for the few positions, and farming enjoyed autonomy without reliance on any other agency, excepting the gods of nature like Indra, the rain-god, Varun, the god of wind, Agni, the fire-god. But being employed or in job was next to begging. But situation has changed to an extent that getting employed is the most important objective of a student, and facilitating employment to the students is the most coveted goal of the present higher education.

The undeniable fact is that education should at least be able to provide the means of sustenance with dignity. Without food it would not be possible for the educated people to sustain themselves with mere degrees. So, the teachers in higher education cannot escape the responsibility by stating that equipping students with vocational and professional skills is not their job but of the government and of the ministry of labour. The present higher education system has to think of ways of making its degree holders employable, preferably self-employable, or value-adding to the existing courses by incorporating skills components to the existing courses programmes.

The job-orientedness of education is desirable but obsession with it would make it lopsided, in the pursuit of job-oriented education, the students should not cease to be human beings. The world order has already reached the post-human society. Virtual has taken over not only real but human. Hence, the real challenge before human civilization is to sustain leftovers of its humanity. The obsession with employment and prestige attached to annual pay package and perks should not denude the education of its concern with learners/teachers with human values. The emphasis should, however, be on acquisition and imparting/acquisition of skills, and re-establishing the relevance of labour and self-sustenance. However everything learnt for preparation for taking part in commercial or political battle of life does not have much to do with culture. All educated should preferably be employable, and carpenters, the trope which can be used for seekers of skill-oriented courses. But the system should also ensure that all carpenters, and those who are employed, are good human beings too.

Lead out

The basic purpose of interdisciplinarity is to critique the existing academic disciplines, and leave transformative impact through their canonization and integration. The academic space for that matter is neither for establishment nor for establishing anything. It is for questioning the established truths and find out which is/are fact(s). Though it cannot stop the lies or non-truths from being bold, but it must see to it that lies do not get established as truths or facts. It does so by questioning not only the established truths but also proposed ones. Interdisciplinarity adds a new dimension to the basic function and duty of academic pursuits, as it allows questioning from other disciplines.

Endnotes:

1 For the discussion of Indian knowledge systems, see 'Indian Intellectual Tradition', in Kapil Kapoor, *Literary Theory: Indian Conceptual Framework,* New Delhi, Affiliated East-West Press, (1998, 7-16)

2 "*Aa no bhadrah kratvu yantu vishwatah." Rgveda* (Let the best thoughts of the world come to me from all directions.)

3 For discussion and frameworks of comparative literary studies in the context of Indian linguistic and literary realities please refer to Avdhesh Kumar Singh, "A Case of Comparative Literary Studies" *English Studies: Indian Perspectives*, ed. Makarand Paranjape et al, Delhi: Antara Books, 2005, 20-39.

4 Apart from the lack of interdisciplinary and comparative study of literature, the teaching of literature in Indian universities has been unimaginative, traditional lecture based in which learners remain passive and uninspired, and their literary sensibility, creative and critical faculties remain unenriched, as the best mind either strive to curb their talents in order to accommodate themselves to examination system or suffer its vicious ways. For the redundancy of literary studies in Indian universities, the sad state of teaching of literature is responsible.

No serious scholar/teacher of literature, however, could escape discussion of institutions like literary studies, Departments and universities that facilitate, condition (at times even hinder) teaching, learning and research of/in literature. Like TS Eliot, FR Leavis, RS Crane and Jacques Derrida in the West, Suresh Joshi (1921-1986) in Gujarati wrote about the existing status of university and teaching language and literature in it particularly in his essay titled "*vidhyapitho: Samasyayo ane Margo"* ("Universities: Problems and Solutions"), and "*Vidyapeethman Sahityanu Shikshan"* (Literature Teaching in the University).

Namvar Singh, the noted critic in Hindi, discussed status of Hindi and its teaching in his essay "Vishvavidyalaya mein Hindi" ("Hindi in Universities"). Similarly in Gujarati, Suresh Joshi in his essay "*Vidyapeethman Sahityanu Shikshan"* (Literature

Teaching in University), saw the dominance of politics and science in life as well as in social life, and decline in the fortune of literary studies by analyzing it in terms of religion, semantics and ethics. To him, in the given context, the responsibility of creative writing, literary criticism and profession of teaching has increased manifold. Hence only such 'a true teacher' of literature can serve the purpose that never ceases to be a student, and remains a true 'devotee' of literature. S/he employs her/his teaching in such a way that it proves useful for creating the favourable atmosphere for realizing those possibilities. Her/His effort should not be to establish new benchmark of quality by creating artificial difference between different parts of literature. Such a teacher, according to Joshi, takes care of various branches of study, useful to literature, and makes a conscious endeavour to remain acquainted with the contemporary trends, tendencies, and the newer thoughts emerging from the theoretical criticism and the epoch-making works her/his own, and other languages of the world. Also s/he should always be careful that her/his students do not become the victims of the limitations of his personal likes and dislikes that act as a hindrance in the students' independent development, for the students are not dustbin for her/his (teacher's) opinions gathered from here and there. By presenting many possible contradictory opinions, s/he should encourage a fundamental examination of a subject. Joshi subscribed to the view that teaching and learning are common pursuits. Rather than thinking that s/he is teaching the students, and that all are trying to learn something together proves useful to the teacher because s/he does not have to lose what s/he learns from his students. If a teacher possesses the right vision of the values of literature, true insight into the responsibility of criticism, proper understanding of the barriers in the way of creating literature of the highest kind, his teaching itself can be the source of inspiration for good literature. Rather than asking the students to revere the traditions, s/he should establish the significance of original thinking in them. S/he should see to it that the true fervor for literature and research remains firm against the efforts for promotion at job orb the trivial tendency to achieve superiority over others. His teaching of literature goes beyond teaching the prescribed texts, and opens up ways of creative writing, for the ultimate end of literature teaching is imparting and strengthening creative and critical faculties of learners. 'The true teacher of literature never underestimates the value of creative writing.'

Joshi did not remain content with the criticism of the present state of teaching literature, Gujarati to be precise in his case, but on the basis of his teaching experience he suggested practical and meaningful ways of teaching so that the students are equipped with critical faculties and their creative sensibility is enriched in the process. According to him, rather than prescribing a certain number of texts, the terms of the year should be divided in units, certain texts or parts of the texts should be chosen for every unit from a certain perspective, and a 'creative' re-reading should take place of the same. The text should be discussed from all perspectives giving rise to some fundamental questions, and these questions should be analysed. In this way, after preparing the primary orientation for criticism, students should be given two weeks' time and the list of books for further reading and they should be briefed as regards what kind of discussion in expected of them after the time given to them. After the two weeks' time period, based on the reading material, they should be asked relevant questions, to answer which they have to use their critical acumen; they should write the answers after giving it a good thought with the help of the reading material sitting in a library. After checking these answers, the teacher should discuss the limitations or flaws in the answers and give details missing in it. After we divide the time period of the year in units, if we can arrange this sequential reading for each unit, it will be useful for the objective of studying literature, creating true love for literature and acquiring the critical acumen required for analyzing literature. The notable characteristic of this method is that studying a known text helps in honing the skills of discussing and examining an unknown text. And in this method, we can go beyond the rigid structure of textbooks and use books that can be useful to the fundamental objective of the study. We can avoid wasting a year on a lifeless text with the help of this method. In this method, textbook does not become the goal; it just becomes the means of creating the critical acumen. And then, there is a flexibility to incorporate works of different time periods and different languages.

If a student comes in direct contact with the textbook or the subject of his study, his mind would embark on thinking about it, questions would arise and the contemplation of these thoughts will gradually develop his critical acumen. In the growth of a student, it is apt that educators should, where necessary, use their insight which is an outcome of the long period of literary studies and efforts made in that direction and it should be used in a way that it is useful to the student. Are appropriate questions arising in the mind of a student, or is he repeating the borrowed questions of the traditional discussion? A teacher has to take special care of these questions in/of each student. Right questions arising in the mind is the base of intellectual vigilance. It stimulates zest in him and he may go way ahead of the teacher. S/He may ask questions which never occurred to the teacher and it may happen that s/he goes on to challenge the givens of her/his teacher. Only when such a situation arises that two watchful and keen minds will come into contact with each other and interact to enhance their knowledge.

In such a method, according to him, the teacher should remain watchful. If s/he has to teach a text by some modern poet, the teacher should study it ones again. Just by providing available information to the students, s/he should not consider his responsibility over. If the study of literature is done this way, the works, which can stand deeper scrutiny, will offer newer evaluation and ultimately be useful to the insight into literature which is evolving, to literary criticism and to creative writing. But has such a situation been created here? The works of Gujarati writers like Goverdhanram Tripathi, Nanalal and B. K. Thakore can stand some more analysis. He lamented the fact that the people of his tribe kept repeating the same things about them that have been said before. Consequently, Gujarati academia is yet to make a true estimate of Goverdhanram as a novelist, B. K. Thakore's concept of poetry and evaluation of his poems in the light of his concept of poetry, and a fresh study of the uniqueness and limitations of Nanalal's talents. He conceded to the fact that the present education system did not create the bas3e for the exchange of ideas between the vigilant minds of the students and teachers of the last twenty years.

Joshi 's views advocating new approach of receiving literature in the university class room are relevant for us, as he pleaded for interactive learner-centric, creative and collaborative method of teaching and learning of literature. While seeking departure from the traditional lecture mode and insisting on fresh teaching, he left space for new approaches like interdisciplinarity. For instance, Goverdhanram Tripathi's assessment would be further enriched if his novel *Saraswatichandra* is read in the light of his non-fictional works during the poerid, and by keeping the magnum opus in terms of the rise of Indian novel in the 19th century, its sociology and ideology and cultural studies. During the period from 1887 to 1901, Tripathi had studied diverse subjects like history, philosophy, politics, logic and economics and wrote on them as well. Tripathi's *The Classical Poets of Gujarat and Their Influence on Society and Morals* (1894) is an influence study that was written with historical method and can be useful for sociological and ethical reading of Gujarati literature.

Unfortunately, Suresh Joshi's pieces of advice to teachers of literature remain unheeded, proving that the teachers are bad learners, more so in case of teachers of literature, perhaps.

References

Alan, Liu. 'The power of Formalism: The New Historism', *ELH: English Literary History* 56, 4, Winter, 721-71.

Bacon, Francis. *Instauratio Magna Scirntiarum (The Great Restoration of Learning),* in *The Great Instauration and New Atlantis,* 1620, ed. J Weinberger, Arlington Heights, IL: Harlon Davidson, 1980.

Barthes, Roland. *Image-Music-Text,* trans. Stephen Heath, London: Fontana, 1977.

Bazin, Germain. *French Impressionist Painting in the Louvre,* New York: Harry N Abrams,n.d.

Bloom, Allan. *The Closing of the American Mind,* London: Penguin, 1987.

Clark, Kenneth. *Civilisation,* London: BBC Publication, 1969.

Cohen, Tom. " Introduction: Derrida and the future of…" in *Jacques Derrida and the Humanities: A Critical Reader,* ed. Tom Cohen, Cambridge: Cambridge University Press. 2001.

Crane, R S. *The Idea of Humanities,* Chicago: Chicago UP, 1967.

Emerson , Gertrude. *The Story of Indian Civilization,* Orient Longman, 1964.

Forster, Hal. "Trauma Studies and the Interdisciplinary: An overview," in Alex Coles & Alexia Defert, eds. *The Anxiety of Interdisciplinarity,* London: BACKless Books, pp. 158-168

Frank, Roberta. ' "Interdisciplinarity": The First Half Century', in E G Stanley & T F Hoad, eds. *Words: For Robert Burchfield's Sixty-Fifth Birthday,* Cambridge: D S Brewer, 1988.

Hamilton, Clive. *The Freedom Paradox: Towards a Post-Secular Ethics.* Crows Nest NSW:

Hiriyanna, M. *Indian Conception of Values,* Mysore: Kavyalaya Pub, 1978.

Joshi, Suresh. "Vidhyapeetho: Samasyayo ane Margo" ("Universities: Problems and Solutions") in Vimarsh, Vol I, No I, pp. 150-158. (Gujarati)

____. "Vidyapeethman Sahityanu Shikshan", *Suresh Joshinu Sahitya Vishwa,* Vol. V, Gandhinagar: Gujarat Sahitya Akademi , 2005, 24-51. (Gujarati)

Jung, C G. "Psychology and Literature", *Modern Man In Search of a soul,* San Diego, London & New York: Harvest & HBK Book 1933.

Kant, Immanuel. *Critique of Technological Judgment,* trans. James Creed

Meredith, Oxford: Clarendon Press, 1928. I pub. 1790.

Lefebvre, Henri. *Critique of Everyday Life,* Volume 1: Introduction, trans. John Moore, London: Verso, 1991.

Lyotard, Jean-Francois. *The Postmodern Condition: A Report on Knowledge,* trans. Geoff Bennington & Brian Massumi, Manchester: Manchester University Press, 1984.

Nietzsche, F. "On the Future of our Educational Institutions", Fifth Lecture, 23 March 1872, *The Complete Works of Frederick Nietzsche,* Vol. III, 132-3.

Nussbaum, M.C. "Historical Conceptions of the Humanities and their Relationship to Society" in D. Callahan, A.L. Caplan & B. Jennings ed. *Applying the Humanities,* New York: Plenum Press, 1985.

Remak, Henry. "Comparative Literature: Its Definition and Function," in Stalknect and Horst Frenz eds. *Comparative Literature: Method and Perspective,* Carbondale: South Illinois Press, 1961.

Siebers, Tobin. "Sincerely Yours" in Charles Bernheimer, ed. *Comparative Literature in the Age of Multiculturalism,* Baltimore & London: The Johns Hopkins University, 1995.

Singh, Avadhesh Kumar. "A case of Comparative Literary Studies" *English Studies: Indian Perspectives,* ed. Makarand Paranjape et al, Delhi: Antara Books, 2005.

___. "Contextualizing Higher Education in India", *University News,* August 6-14, 2007, 1-8.

___. "(The) Future of Comparative Literature", in *New Directions in Comparative Literature,* eds. Rambhau Badode et al, Mumbai: Macmillan, 2007.

Singh, Namvar. "Vishvavidyalaya mein Hindi", *Vad Vivad Samvad,* Delhi: Rajkamal Prakashan, 1989, 129-134. (Hindi) Sushruta, *Sushruta Samhita*

Toulmin, Stephen, *Human Understanding, Volume One: General Introduction and Part One, Oxford:* Clarendon Press, 1972.

Vico, Giambattista. *On the Study Methods of Our Time, trans. Elio Gianturco,* Indianapolis, IN: Bobbs Merrill, [1709] 1965.

Watson, Peter. "The American Mind and the Modern University", *Ideas: A History from Fire to Freud,* London: Weidenfeld & Nicolson, 2005.

Weingart, P. "Introduction" in P. Weingart & N. Stehr eds. *Practicing Interdisciplinarity,* Toronto: University of Toronto Press, 2000.

International Journal of Humanities in Technical Education
Volume 1 | Issue 1 | January, 2015

Literacy Online: Multilingual English Language Learners' Electronic Literacy Practices Outside Class

James Simpson[8]

Introduction

Contemporary global society is characterised by international movements of people, many of whom come to a new country with a need to learn a new language. This paper concerns the electronically-mediated literacy practices of adult migrants to the UK who are learners of English for Speakers of Other Languages (ESOL). It reports on an aspect of a British Academy-funded project which investigates identity construction in text-based electronically-mediated communication, *Identities Online* (Simpson and Hepworth 2010)[i]. In the broader project the participants' electronic literacy practices are conceptualised as occurring in two domains: with teachers and classmates within the centres where learning takes place; and with peers, colleagues, friends and families in everyday sites of electronic literacy practice. Permeating these 'real life' settings are the virtual spaces where online interaction happens. This paper focuses on one of these domains: multilingual students' electronic literacy practices in their out-of-class lives.

The paper is structured thus: this introduction is followed by an outline of the key theoretical and contextual areas which have informed the work. The main part of the paper comprises a thematic overview of students' out-of-class electronic literacy practices, expanding on each of the major themes generated from a content analysis of the group and individual interviews with students on the project. The overview is in four sections: emergent themes; specific practices; constraints on ICT use; and identity construction in online discourse.

---

[8] Senior Lecturer, The School of Education, University of Leeds, United Kingdom.

The data from interviews with learners was analysed using a grounded approach, generating the overview: categories were defined through an analysis of a first set of interviews, then expanded in analysis of subsequent interview data (Glaser and Strauss 1967). This approach to interviews is tightly accountable to the data, allowing as it does categories to emerge from the data themselves, rather than be pre-defined by the analyst[ii].

Background

Migration and Transnationalism

Adult migrants who find themselves in English language classes in the UK come from a hugely diverse range of geographical, social and economic backgrounds, and include refugees seeking asylum, people from well-established communities, so-called economic migrants escaping poverty in their home countries, and people joining their spouses and family members. Contemporary migration, moreover, frequently involves continued movement after the initial migration event. In 'classic immigration', it was at least assumed that migration would be 'forever.' In contrast, *transnationalism* is now commonplace. Relative ease of movement, coupled with the possibilities of connectivity afforded by relatively cheap travel and of electronic communication, ensures that maintaining the links and networks that extend between the host country and the homeland is feasible for many migrants. Furthermore, migration is increasingly seen as something that is not necessarily permanent. Thus transnationals have a stake in retaining connections at a distance with their place of origin. Some people of course become well-established in a new country, and on a superficial level resemble the 'classic migrants' of the past (though even this notion has long been contested: see Cerase 1967 on the mass return to Italy of US migrants). Even so, established migrants still travel to their country of origin fairly frequently, and make extensive use of internet-based tools of electronically-mediated communication such as email and *Skype* to maintain links with their families and friends back home and in other parts of the world. Moreover, Britain's towns and cities, rather than being host to stable settled communities, increasingly display what Vertovec (2007) describes as 'super-diversity' or the 'diversification of diversity' characteristic of contemporary urban life.

Literacy online

The study focuses on *literacy online*, a shorthand phrase to describe what happens when individuals engage in electronic literacy practices: plural social practices involving the use of ICTs such as email, text chat, social networking, blogging, and mobile phone messaging. Communication using new literacy technologies has profound implications for the notion of authorship and the construction of identity: by its nature, electronic communication offers the opportunity to develop and emphasise different aspects of identity with new sorts of writing, and in new, multimodal, multilingual and globally-spread social spaces. Thus online textual identity is of a different order from other aspects of identity. Electronically-mediated written interaction is often produced in real time, with only a minimum of reflection and editing before posts are sent. This is particularly the case in synchronous electronically-mediated chat (text chat) and mobile phone SMS messaging, known for their interaction 'on the fly.' It can also be the case with supposedly more reflective asynchronous forums, for example communication using email.

Participants

This paper draws upon data from interviews with 26 adult students, multilingual learners of English, conducted over the course of the *Identities Online* project, which ran from October 2007 to March 2010. These included group interviews and more in-depth individual interviews. All students attend state-funded classes of ESOL – English for Speakers of Other Languages – at colleges and centres in cities and towns in the North of England.

Of the 26 interviewed student participants, 15 are female and 11 are male. All are aged between 18 and 45. 18 of them come from Asia, with eight from Iran, Iraq or Kurdistan, four from Pakistan, and others from India, China and Japan. Six come from Africa, with students from the Congo, Angola, Guinea-Bissau and Ethiopia. There is only one European student, from Slovakia. The students also vary in terms of their immigration status in the UK. For example, almost half the participants are refugees. Some are on their own but the majority are in the UK with partners and, often, young children. The group includes women who are separated from their partners and living in the UK as single parents. A number of the students are married to British citizens and some are actively seeking British citizenship. The participants are bilingual and, in many cases, multilingual. Common languages include: Farsi, Arabic, Kurdish and Urdu. Most have a reasonably good level of English and are at Level 1, or Upper-Intermediate level on England's National Qualifications Framework.

Emergent themes: Electronic literacy practices inside and outside class

Cross-cutting issues

Some issues cross-cut the data set. Firstly, there is the question of access to technology. This is connected to practical matters such as time, money and opportunity, and is thus related to factors like employment status and educational access in the UK. It is concerned with aspects of what is known as the *digital divide.* In Graddol's terms (1997: 39): 'unequal access to information technologies will create new distinctions between the information poor and the information rich.' (See Warschauer 2003 for a nuanced account of this notion.)

Gender issues also emerge as a significant factor. For example, being the primary care-giver in a young family often restricts access to ICTs, if only in terms of time available. Women, often with young children in the UK education system, make up the majority of the participants, which corresponds with the general pattern of the student body in England's ESOL classes: Baynham et al. (2007) found in a survey of over 500 ESOL students that around 63% were female, and a similar proportion was found in a more recent survey of over 200 students by Simpson et al (2011).

Then there is the question of language, which runs through the data and is tightly connected to the theme of identity. The ways in which language is used whilst engaging with ICTs is noteworthy. There is evidence that English is, perhaps not surprisingly, used as a *lingua franca*, but there is also evidence that some students use English, or a blend of English and mother tongue, when communicating with friends who share the same expert language. This multilingualism might be the result of factors like a long period of residence in an English-dominant country or an identification of English as the language of new technologies (see Cooke & Simpson 2008: Chapter 6).

Finally, there is the question of age and the life course. A good number have children in the UK education system and some explicitly refer to the ICT practices of their children. Age is an interesting factor to consider in relation to electronic literacy as many of the ICT practices evident from the data, e.g. the use of messenger programmes, are relatively new. Age is also closely connected to education, and indeed to access, with the school-age children of multilingual migrants having regular access to new technologies, and instruction in their use, through the UK education system.

Spaces of use

There are a number of physical spaces where the students on the project engage with ICTs. The most common are the classroom and the home. Beyond this, other spaces include public libraries and internet cafés. The use to which ICTs are put differs markedly inside and outside the classroom space.

Unsurprisingly perhaps, one of the most common places where individuals engage with ICTs is the home. For the participants in the study, the most common purpose for engaging in electronic literacy practices is undoubtedly to maintain contact with family and friends in the country of origin and, where other family migration has occurred, elsewhere. This contact takes place when people are at home.

In their places of learning, the other main site where participants engage with ICTs, this sometimes takes the form of accessing computers in college libraries but, more often than not, centres on the classroom. In sum, the teachers of the students in the project actively incorporate ICTs into their classroom practices. For a number of the women with young families, attendance at college provides an opportunity to use computers that they do not get time for at home, and to use the internet to seek information that is not related to their English language learning. So, practices may bleed across domains of use: college computer use may have characteristics of non-college use, and the ICT facilities in college present simply an opportunity to get onto a computer.

Beyond the home and the classroom, there are more public spaces: the public library and the internet café, for instance. Discussion in the interviews turns on questions of money, guidance and privacy. On the question of money, one student says:
now I use not cyber cafe but if I want to go internet I want to use internet I
go library because is free and cyber café you have to pay[iii]

So, internet use is free in the public library but internet cafés charge. This is clearly an important economic consideration and a potential barrier to access. Another student notes that help and advice in searching for web-based material is available from library staff. However, a lack of privacy is highlighted as a potential drawback of computer use in the library. For example, one student points out that '*in library everybody sit and know what you are doing*.' Another picks up this thread, pointing to the advantages offered by the cyber-café in this regard:

> if you go to cyber café and you need a computer and you need also privacy so and the cyber café manager he give you a separate room or separate equipment where you can go and doing your own work

There is also a point to make about the people the students are communicating with, in terms of where they are accessing computers. For example, the student from Japan says of her interlocutors:

> back home they don't have a computer at home just in the internet café things these type of things places

Finally, in the course of a discussion of ICTs in public domains, a young female participant originally from Pakistan makes an interesting point about domains of use, saying:

> I don't like to go to a café or somewhere or in the library I just use my phone

There is clearly an issue about feeling safe or comfortable using computers in public domains. This is not elaborated upon in the interview but, for a young Pakistani woman, there is a way in which issues around both gender and culture are implicated here. The home is a safe, secure and private space but public spaces less so and perhaps especially so for young ethnic minority women.

Tools and frequency of their use

The main ICT-tools and programmes used by participants on the project are:

- Synchronous text-based chat using *MSN Messenger*, *Paltalk* and other messenger programs.
- Audio/video text-supported chat using *Skype*
- Social networking (web 2.0) sites such as *facebook*
- Email
- Mobile phone text messaging

As far as the use of text-based chat is concerned, some participants are heavy users. One young man, for example, says that he goes online '*maybe three or four times a week'* and chats for '*maybe three hours*.' More common were those who use it regularly but less frequently (perhaps weekly) and for a shorter duration to keep in touch with family.

Email use varies from those who use email every day, through those who, perhaps most commonly, use it two or three times a week, to those who don't use it at all. Similarly, with mobile phone text-messaging, there is a cluster around those who say they use it '*not every day sometimes*.' Some are heavy users, one student sending '*more than 10 every day*.'

Out of class electronic literacy practices

Maintaining links with family and friends

Perhaps the most common electronic literacy practices visible in the data set are the use of text-based messenger programmes. The primary function here is to keep in touch with family and friends in the students' countries of origin. Many of the students use ICTs for just this purpose:

> if you go to the messenger yeah and you want to talk with somebody for example […] I am at home and you are at your own home yeah and so we chat on internet with each other and if we want to know how are you how you are looking or something then we use webcam so we saw the pictures live and then we use the headphone for talking also […] like mobile

The affordances of this practice in terms of its interpersonal function are elucidated clearly here, using a web camera and a headset to see, as well as talk to, family members across long distances. Some students also use e-mail to stay in touch with family back home but the advantages of synchronous, video-supported tools such as *Skype* are captured by this student, when she talks about communicating with her husband in Iran:

> *voice is better you feel closer and you can see each other from webcam it's better*

When using *Skype* or *MSN Messenger* the students engage in a variety of different practices. Some use the webcam and speak without necessarily typing, while others type too. Many of the students prefer to make use of headsets and webcams, even though they use email to keep in touch. A South American student says:

> *I need to hear the voice [...] email for me it's just sometimes I don't think email you know you can tell everything I think when you listen the voice you feel emotionally*

The question of typing raises also raises the issue of literacy, including electronic literacy. Of text-based chat, one student says:

> *chatting is difficult because it have a different alphabet and it's difficult to chat writing*

So some students are engaging in text chat using Roman letters and the English alphabet. If they are coming to text chat with expertise in a different writing system, the process is potentially problematic in terms of the literacy burden it imposes.

Other decisions about whether to speak or write online are made for practical reasons associated with the technology and connectivity. For example, one female participant from Iraq says that she writes if the audio connection is not good or if she is sending a photograph. The selection of a particular ICT practice is not just dependent upon language; it is dependent upon the skills people have in manipulating the technology itself. For instance, another Iraqi student says that she talks to her parents back home using *Skype* and a webcam but doesn't type, as they lack the necessary keyboard skills. This clearly implicates factors like age and access to education in the new digital technologies. The strategy adopted by this student to use voice-based electronic communication is analogous to the pre-digital age use of cassette tapes amongst migrant communities to communicate with family and friends with restricted literacy.

Creating new links and making new friends

For a small number of the participants, the use of text-based chat programmes and social networking sites like *Facebook* fulfil another function: that of forging new links as well as maintaining old ones. Kaya puts it memorably when he says that ICT offers a '*window to new world*.' He talks about being able to move beyond the constraints of making friends within his class. When asked who he is in contact with he says:

> *not at all in classroom [...] people around the world [...] some of them in UK some of them in my country [...] some of them all over the world*

He relates how he has just been to visit a contact made on the internet in Switzerland, attesting to the potential of new technology to make new links across distance. For another of the students, these new links extend to finding potential romantic partners online: he has established links across the UK.

It is interesting that the two students who engage most extensively in this type of ICT practice are young, male, and unattached in the UK. Both are refugees seeking asylum and both have had difficulties making friends with immediate classmates and housemates. Saddique arrived in the UK unaccompanied from Kurdish Iran aged 15. Now 18, he is still awaiting the outcome of his claim for asylum. In the meantime he is aware that if he falls foul of the law or runs into trouble with the police, his claim will be jeopardised. Hence he tries not to leave his flat after dark, and his 'face to face' socialising is minimal. The internet and computer-mediated communication offer an opportunity to forge a social life and friendship ties that are not available in daily life for this isolated youngster.

Programmes used to communicate with new friends include *Paltalk*, *MSN Messenger* and *Facebook*. However, a number of the female students also reveal that friends, male and female have used chat-rooms to find potential partners. One female student says, of the affordances and outcomes of social networking:

> *it give you more chance to meet new friends [...] I know I have two friends [...] they are get married my friend he used chat room he met a girlfriend many years ago they get married they are very happy and I have a friend she study in the university next week she come she are going to China to get married*

Another student relates a more cautionary tale about how a female friend had been deceived by the online identity adopted by a potential partner, which raises the question of online security. This issue is thrown into particularly sharp focus when children go online. In the following discussion on social networking sites and web-chat, the need to control and monitor internet access for children is highlighted as a concern for students with younger children.

Shari:	my children […] not much allowed (.) going and talking and typing the same time as the other person
Researcher:	you say not much allowed (.) do you mean you don't let them
Shari:	yes for children (.) but […] sometimes I don't know who is their friend so for safety reasons […] we check them first and then they go for the computer

Here, the difficulty of knowing who children is chatting to online is a major concern for Shari, as for a number of other mothers interviewed for the project.

Reading on the web

Staying with the idea of keeping in touch, some students use the internet to access news from back home, in their expert language as well as in English. For example, Javed says:

> I went to BBC News I like reading news about everything […] sometimes in English sometimes translation for Arabic because I speak Arabic […] sometimes I don't understand in English very well I go to Arabic translation and I read all this

Some of the students use the internet to check information pertinent to their status in the UK on the Home Office website. Javed explains

> yes always Iraq and about the Home Office site yes because I have no any definite (.) I like read about what happens in Home Office what decided in future I read this for some information about this

In many respects the participants' use of ICTs is quite mainstream: they are after all consumers online. As one student says: '*if you have internet websites you can find anything*' and other uses the internet identified included shopping for plane tickets and cameras. One participant makes extensive of the internet to work from home as it allows him to spend more time with his young family. He says:

> it's better than that going to work for 10 or 12 hours for somebody who say oh do that oh do that […] my job is if I need I'm going to do it but if I don't need I stay home chill out with the family or visit somewhere or go to holiday […] better yeah I think its better

Although this blurs the domains of work and home a little, it is interesting that he separates these by using two different computers: a desk-top for his personal and recreational ICT use, and a laptop for work.

Constraints on ICT use

Access to ICTs is an issue which implicates the socio-economic realities of students' lives: time and money are commonly invoked as barriers. A less obvious but still salient issue is that in classroom settings, and in many out-of-class areas of use, students are faced with the linguistic and socio-cultural demands of engaging in online practices in a non-expert language.

Time

A number of constraints on ICT use emerge from the data. To begin with, there is the constraint of time, especially for some of the female students with children to look after. The question of time impacts upon the question of when, where, and how often ICTs are accessed: often later in the evenings, when children are in bed. One female parent, when asked if she used computers outside class, says simply: '*no I have no time (.) in holidays maybe*.' Another is similarly constrained by time: '*I don't have time to go back in the library and use the computer now I'm with two children*.' The issue of gender emerges here, and childcare commitments limit the time they have to access ICTs and also impacts upon the way they engage with them. One mother chooses speaking over writing for practical reasons as well, saying '*I don't have time to write*' and '*it's difficult to write with small children*.' The heaviest users of ICTs among the participants are young, single men.

It is worth noting that even those students who have no home access to computers manage to make use of them elsewhere, either at friends' houses, or at college. So questions of access impact upon domains of use. A few of the female students commented upon the fact that they only use ICTs in any significant way in college.

Money

There is also the question of physical access to a computer. A number of students did not have access to a computer at home. Still others had computers but no internet connection. The question of a 'digital divide' is an important in the context of students who are generally living on below-average incomes or existing on benefits. The student quoted above, for example, is a non-working refugee and the single mother of two small children.

Cost is related not just to the buying of a computer but also to the ongoing engagement with ICTs, a factor which emerged from the interviews. Luisa says that once computers are purchased, computer-mediated communication is cheaper than telephone contact:

> I use email just to email in my country in Angola in Brazil
> you know because you know to phone them is very expensive

This perhaps explains the significant use of *Skype* among the participants, as it is free to access if you have an internet-connected computer. Text messaging is also a common practice in connecting cheaply with friends and family.

Language and identity online

> if I need to write a message to my friend from Slovakia […]
> I write in my own language in Slovakia but if I need to tell something
> to my friend for the job (.) he's from Italia then I have to speak with
> him in English (Milo, from Slovakia)

The interviews reveal interesting things around the language choices ESOL students make when engaging in ICT practices. To begin with, English has currency as a *lingua franca* both in the context of the multilingual workplace, as the quotation above reveals, and in the context of the multilingual classroom, where students are expected to communicate with each other, and their teacher, in English.

It is also the international language of technology. Access to English gives access to all the resources of the worldwide web, access to capital, in fact. In talking of his education, one of the students says:

> in secondary school we used Word and Powerpoint it was in lessons in my own language but access was in English because if I go on internet the website are in English

English is less a *lingua franca* here than a necessity to participate in practices on the worldwide web. Thus, English is not the end, only a means to an end. It is interesting to consider this in the light of debates on whether English is the dominant online language. Graddol (2006) points to the increasingly multilingual flavour of online communication whereas Warschauer has a slightly different take, characterising the relationship between English as a global language and the internet as self-perpetuating. He says:

> A mutually reinforcing cycle takes place, by which the existence of English as a global language motivates (or forces) people to use it on the internet, and the expansion of the internet (and online English communication) thus reinforces English's role as a global language.
>
> (Warschauer 2003: 98)

The language behaviour of students who have multiple transnational contacts is a particularly interesting feature. For example, a student from Pakistan, who is married to a British citizen, says she prefers to use English because she likes it. She uses English when talking to her children, who were born and are in education in the UK. However, when talking to her in-laws she needs to use her expert language because they do not use English. Multilingualism online adds to an understanding of the role of computer-mediated communication in processes of globalisation. Because computer-mediated communication is not associated with one particular fixed geographical place or – in the case of English at least – one particular population, it seems to be contributing to the destabilisation of linguistic and cultural boundaries. Electronically-mediated practices in multilingual online spaces often involve code-switching and language alternation.

Users of languages with non-Roman writing systems transliterate them using an emergent vernacular, where elements of the expert and non-expert languages are used when engaging in ICT practices (see Palfreyman and Al

Khalil, 2003, for a description of 'Arabic in English'; papers in Danet and Herring 2007; Warschauer et al 2002). Thus, for example, when Shahedah emails her Indian friend in Florida, she uses an emergent variety which includes aspects of Gujarati, Hindi and English. She describes it thus:

> sometime I'm using many words in English but in between our language like Hindi or in translated English

Luisa also talks about a friend who blends elements of her expert and non-expert languages, as well as the abbreviations and shorthand forms familiar from online communication:

> I got a friend she writes me like this […] she came here she came with eight years old and she mixed the Portuguese and she doesn't know the right word you know and then she mix all the phrase with she's start in Portuguese then she use English then she abbreviate things yeah

Vernacular transliterations of the type described here are particularly predominant in sites where users are globally spread or where they are part of a diaspora (see Lam 2004). Research in this area suggests that using such vernaculars better enables individuals to navigate between their native language and culture and those of their adopted home. Warschauer (2009: 126) notes that 'They allow those who cross physical and societal boundaries to experience *transculturation* rather than *acculturation*.' That is to say, rather than having to reject a previous culture when adopting a new one, electronic communication using emergent vernaculars makes it possible for people to better cross *between* cultures.

Conclusion

Computers are part of us (Indian woman)

ICT use and electronic communication suffuse the daily practice of the adult migrants who were interviewed for the project reported here, as is common in contemporary life generally. Their electronic literacy practices outside the classroom are chiefly interpersonal ones: ICTs are used to maintain relationships with friends and family, especially across long distances, a task for which the tools employed (email, text and voice chat, social networking sites and media) are eminently suited. A section of the participants use the tools of computer-mediated communication to make new friends. Web sites are widely read to keep in touch with news from countries of origin, and to keep up with developments in UK immigration policy.

The spaces where people use ICTs and electronic communication outside their places of learning are predominantly: the home, the classroom, the library, and the internet café. Particular practices are more associated with some places than with others: for example, people are more likely to be in touch with family 'back home' when they are in their own homes, and will use other spaces for less personal practices, for instance, reading the web. Questions of access also emerge: the economic position of many on the project preclude the purchase of expensive computer equipment, and they are obliged to use the library or their college's computers for web access, for instance.

In terms of languages used in online written communication, language alternation is prevalent, as well as emergent hybrid varieties and vernacular transliterations (e.g. 'Urdu in English'). This is particularly the case when people are communicating with others from their own countries of origin but who themselves are migrants (i.e. communication in diasporas).
The distinction between 'inside-outside' (i.e. inside and outside class) is a useful heuristic for viewing current practices in ESOL classroom-based research; as other parts of the project show, there is a noticeable disjuncture between the ICT practices inside and outside the classroom. However, there is also a sense in which practices mix together across domains of use. A direction for further research is to investigate ways in which students can appropriate the tools and spaces of new technology in ways which benefit their learning, just as they have done for other areas of their communicative lives.

Endnotes:

i. Funded by the British Academy, grant number LRG45480.

ii. I would like to thank Michael Hepworth for his preliminary analysis of this data set.

iii. Transcription conventions for this paper:

(.)	short pause
[...]	omitted text

References

Baynham, M., C. Roberts, M. Cooke, J. Simpson, K. Ananiadou *et al*. 2007. *Effective teaching and learning: ESOL*. London: NRDC.

Cerase, F. P. 1967. 'A study of Italian migrants returning from the U.S.A. *International Migration Review* 1/3, 67-74

Cooke, M. and J. Simpson. 2008. *ESOL: A critical guide*. Oxford: Oxford University Press.

Danet, B. and S. Herring. 2007. *The multilingual internet*. Oxford: Oxford University Press.

Glaser, B. G. and A. L. Strauss. 1967. *The discovery of grounded theory: Strategies for qualitative research*. Chicago: Aldine.

Graddol, D. 1997. *The Future of English?* London: The British Council.

Graddol, D. 2006. *English Next*. London: The British Council. http://www.britishcouncil.org/learning-research-englishnext.htm

Lam, W. S. E. 2004. 'Second language socialization in a bilingual chat room: global and local considerations.' *Language Learning and Technology* 8/3: 44-65.

Palfreyman, D. and M. al Khalil. 2003. ' "A Funky Language for Teenzz to Use": Representing Gulf Arabic in Instant Messaging'. *Journal of Computer-Mediated Communication* 9/1. http://www.blackwell-synergy.com/toc/jcmc/9/1

Simpson, J. and M. Hepworth (2010) *Identity Online: Multilingual learners' textual identities in and out of class*. University of Leeds/British Academy. Available online at http://www.personal.leeds.ac.uk/~edujsi/IO_report.pdf

Simpson, J., M. Cooke, J. Callaghan, M. Hepworth, M. Homer, M. Baynham, T. Allen, R. Grant and S. Sisimayi (2011) *ESOL Neighbourhood Audit Pilot (Harehills)*. Leeds City Council/University of Leeds. Available online at http://www.education.leeds.ac.uk/research/projects/henna-project

Vertovec, S. 2007. 'Super-diversity and its implications.' Ethnic and Racial Studies 30/6, 1024-1054.

Warschauer, M. 2003. *Technology and social inclusion: Rethinking the digital divide*. Cambridge, MA: MIT Press.

Warschauer, M. 2009. 'Digital literacy studies,' in M. Baynham and M. Prinsloo (eds.) *The future of literacy studies*. Basingstoke: Palgrave Macmillan.

Warschauer, M., G. R. El Said and A. G. Zohry. 2002. 'Language choice online: Globalization and identity in Egypt. *Journal of Computer-Mediated Communication* 7/4.
http://www3.interscience.wiley.com/journal/120837853/issue

International Journal of Humanities in Technical Education
Volume 1 | Issue 1 | January, 2015

Using Blog to Enhance Writing Skill Through Story Writing

Dilip Barad[9]

Given the evidence that active participation in learning plays such a positive role in education, (we) find it surprising that around the world most classrooms are still predominantly lecture based. We have learned that the act of using what we learn helps a great deal in our ability to retain information. (Rhoades). If there is one thing in the learning pedagogy, which supports 'active participation' and 'act of using what learner's learn', it is story writing.

Story is a panacea. It is cure-all for all sorts of problems. As all sorts of learners, be it auditory or kinesthetic or visual; or be it kids or grown up adults or old grannies; or be it fast or slow learners; all and sundry, finds attraction is learning through stories. Stories have power to stimulate, revitalize, rejuvenate, energize, and exhilarate the learners. What else teachers want if such learners are in the class! Half of the battle is already won! The role of the teacher is done; the learning gets a smooth take off from here. It is well observed by Myrtis Mixon and Philomena Temu – “Stories told and read at home and school both entertain and educate young learners. Using stories in the classroom is fun, but the activity should not be considered trivial or frivolous.” (First Road to Learning: Language through Stories). These last words 'should not be considered trivial or frivolous' are very important. We should think of wider pedagogical validation for learning through stories.

Pedagogical validation for learning through stories

Several researches have supported and validated the idea of learning through stories. Cortazzi refers to the idea that storytelling as essential to education and specifically to language teaching. (Narrative Analysis). Zipes(1995) and Morgan and Rinvolucri (1992) observe stories as elementary part of the whole language approach to learning, influencing the “whole person” and stimulating to the subconscious. (Creative Storytelling) (Once upon a time: Using stories in the language classroom.). According to Brumfit and Johnson (1979), reading or telling stories in class are a natural way to learn a new language. (The communicative approach to language teaching).

---

[9] Professor and Head, Department of English, M.K. Bhavnagar University, Bhavnagar.

Pedagogical support for learning through blogs

Having established importance of stories and its pedagogical implications, we should, now, look at another important aspect of this article i.e. blog. Gale of change is blowing in the pedagogy of Teaching English Language and Literature (TELL). Information and Communication Technology (ICT) is a catalyst agent. ICT has initiated new possibilities into the classroom. The marriage between education and Internet technology has made a deep impact on perspectives about teaching and learning. Technology, today, has revolutionized the way teachers taught foreign/second language. (Barad, Experimenting ICT in Teaching English Language and Literature). In fact, the relationship between teacher and taught has undergone a phenomenal change. (Barad, Pedagogical Issues Related to Speaking and Listening Skills & Sound Editing) The role of the teacher, the nature and context of learning, as well as the function and relative importance of course content have all been challenged and redefined. Technophobic teachers have no place in this new world order. (Barad, Experimenting ICT in Teaching English Language and Literature). Specifically speaking about the blogs in pedagogical theory, the case study findings of Pham Vu Phi Ho and Siriluck Ushaha (2009) said that 'students expressed positive attitudes toward blog-based peer response activities'. (Blog-Based Peer Response for EFL Writing: A Case Study in Vietnam). Will Richardson observes: “Thousands of teachers and students have already incorporated Weblogs into their classrooms and into their practice. Blogs, as they are known, are easily created, easily updateable web sites that allow an author (or authors) to publish instantly to the Internet from any Internet connection. They can also be interactive, allowing teachers and students to begin conversations or add to the information published there. Weblogs are the most widely adopted tool”. (Blogs, Wikis, Podcasts, and Other Powerful Web Tools for Classrooms). Thus, blogs are considered as very important tool for the pedagogical purpose in English language learning. Even the study by Triona Hourigan and Liam Murray has revealed the fact that “the potential impact of the blog writing phenomenon upon teaching and learning contexts reveals an important area for consideration for all university educators, and in particular for e-learning practitioners. (Using blogs to help language students to develop reflective learning strategies: Towards a pedagogical framework).

Similarly, Di Zhang's research also supports the inclusion of blogs in pedagogical theory. (The Application of Blog in English Writing).

The Methodology: Cooperative Learning, Activation Technique, Alternative Assessment

After brief overview of pedagogical support for learning with blog, let us have a look at the methodology of the experiment under consideration. In this experiment, an amalgamation of traditional techniques (i.e. communicative language teaching, alternative assessment, cooperative learning, activating material etc) with technology (i.e. blog) is tried out and synergized result is analyzed. Most teachers have seen the reactions students can have to tasks and activities that they do not find engaging: the glassy or rolling eyes, the unfocused behavior, and the cries of "Not again!" (Rosenerg). However, if the teacher makes use of blogs for teaching writing skills through story writing, the learners can be actively engaged in the learning process. Both, 'story writing' and 'blog' are very effective activation material. If used with 'Activation techniques', which, are tools to make materials and tasks more interactive and more learner-focused, encouraging students to take more responsibility for their own learning (Rosenerg), they can work wonders in learning writing skill.

Thus, with the help of cooperative learning (Rhoades) and activation technique (Rosenerg), we will see how three groups of students with 4 students in each group practiced story writing and came up with significant generation of quality language. The language generated in this group activity has given us three different styles of writing also. Well, for several reasons, researchers and practitioners conclude the ideal size for a group is four students (Richards and Bohlke) (Kagan and Kagan) and we followed the same pattern in this experiment. The teacher practiced alternative assessment as discussed by Ghazi Gaith in 'Using Cooperative Learning to Facilitate Alternative Assessment'. Alternative assessment is a useful means of gathering evidence regarding how learners approach, process, and complete real life tasks in the target language (Gaith) and in this experiment the teacher used *'Observing students at work'* as alternative assessment technique. Observing students at work provides valuable information regarding a number of core objectives related to student behavior, for example, work habits, persistence in completing tasks, and development of leadership and social skills. These skills include giving encouragement, respecting others, using a quiet voice, staying in-group, and checking for understanding. (Gaith).

The Experiment: Using Blog for Writing Skill through Story Writing

Three groups with four members in each were given a blog link - http://b4tl.blogspot.in/2009/08/story-writing.html (Barad, Story Writing)–, which has a brief outline of the story and an image of the lion and the mouse. The story of 'The Lion and the Mouse' (Wikipedia, The Lion and the Mouse) is quite known story to all the students. The students were asked to brainstorm the image. Brainstorming has but one rule: there is no such thing as a mistake. Anything goes; all ideas are equal and welcome. To practice brainstorming, teachers should draw on topics that students know and care about. (Rosenerg). While the students brainstormed the story, teacher observed them forming the group, assigning role to each other, emergence of the leader, his/her taking control of the group and all students do the assigned tasks. The teacher roamed around and guided students wherever they found it suitable consulting the teacher. As the students were supposed to give the outcome of their group task in form of 'comment' below the blog post shared with them, they were asking for some technicalities. As the final draft was to be typed and submitted, each group should have one member who is good in typing and knows a bit of blogging. The teacher took care of this, at the beginning, and the groups were formed keeping this in mind. During brainstorming, the following questions were raised to the teacher:

- Should the story be written in past tense or present tense? (The teacher gave them freehand in the use of tense. The only condition was to be persistent with the tense used in the story)
- How about using adjectives and adverbs? Should it be used in abundance or wherever necessary? (Again, freehand was given to the students – with a caution to be used suitably.)
- Should it be written in formal or informal tone? (Students were informed to write in the manner they find convenient – with a caution for the usage of slangs.)
- Can the story be written in form of a 'play' with dialogues? (As the students were of the postgraduate class of major English literature, this was expected. There was no such binding regarding prose or play or poetic writing. Though, there was no question of writing the story in poetic form.)
- Apart from these, there were some technical questions regarding blog login, commenting, recaptcha etc. These technical issues were demonstrated on central screen by the teacher. As there was one experienced student in each group, the problems were resolved without glitch and interruption.

Thereafter, the member of the group who was to write the first draft of the story prepared it and the one to read it aloud read it, in their respective group. Several corrections were suggested in the story to make it grammatically error free and have a flow of the narration rather than a dull non-fictional writing. This sort of 'peer composition' enables students to assist each other in generating ideas for writing and incorporating peer feedback in order to improve their written work. (Gaith).

The final draft was to be posted as comment under the blog shared by the teacher. (Barad, Story Writing). This was the most important step in this entire experiment. It is not the technicalities or any sort of difficulties in doing so. Neither was it the objective of this experiment to teach students 'how to blog or how to comment under a blog post'. If this was learned, it was by product of this experiment. It was observed by the teacher that the students were new to blog, learned about the learning potential of blog and self-publishing. This learning went on helping them in self-learning later on during their studies. That was the learning that happened, an unintentional learning. Here, in this experiment, this step of using blog instead of pen & paper for story writing was intended for different purpose. It has been seen that many teacher avoid group activities and learning for reasons like:

- it leads to chaos and indiscipline in the class (Rhoades) (Sulich)
- the outcome becomes difficult to manage
- the assessment of the group becomes hazardous
- the grading of the group activity becomes challengeable.

Gena Rhoades and Magdalena Sulich discussed interesting ways to tackle the problem of chaos and indiscipline in-group management, but they have not said a thing about assessment and grading or the outcome of the group. There should be transparency in grading assessment of group activity if it is to be graded for final mark-sheet. Therefore, to find a right answer to all the above-discussed issues, which makes teacher reluctant in using, group activities, is to bring in technology. The blog was found to be easy to handle and user-friendly, so it was the obvious choice among the gamut of Web 2.0 tools available.

Let us see how it worked. The change from pen and paper to blog brought in one vital difference in entire activity. This was a very important change, which took the outcome at a greater height. In pen & paper mode, students know that nobody outside the class is going see their activity. Whereas, in blog, the activity will be seen by one and all, including their parents, friends and relatives. This makes them conscious and motivates them to walk an extra mile in the activity. They seriously workout the drafts to see that they are free from language errors and tries to make it as better as possible. This simple trick of putting the task online solves the problem of 'indiscipline' (Sulich) in form of not taking work seriously and performing the task with sincerity. The adult students do not pose discipline problem as that of children. The indiscipline for adult is not to take the tasks seriously and do it for the sake of doing it. However, if the task is to be read by anyone online, his or her attempts are genuine and the result is far better than expected. Secondly, the outcome can be managed well in form of comments under teacher's blog post. No worry about the paper being lost or damaged with the passage of time or in hurry to file the documents. It also helps in better portfolio management. (Rosenerg). It gives good opportunity for transparency in assessment. As all the students, their parents and other stakeholders can see the tasks performed, their faith in system in reinstalled. There is a feeling of faith in the grades. Besides, it provides a very good learning for one and all. The slow learners get an access to the tasks performed by the fast learners. The class learns together. The goals of cooperative learning are achieved with greater degrees of fulfilment than doing the same thing on pen & paper mode.

Enhanced Writing Skill - Three styles of writing in English language

Working thus, in groups, putting into practice the aspects of cooperative learning, teacher doing the job observing the students as a part of alternative assessment and the activation technique at its best in form of blog-comment, the outcome is supposed to be very interesting. The outcome is very significant and gives us ample opportunity to discuss.

Let us see the stories written by the three groups:

Group 1:

Once a lion was sleeping beneath a tree suddenly, a rat came to play there. It climbed over the body of the lion. It was unknown to the dangers and it started playing with whiskers of the lion. Soon the lion woke up and roared angrily. The rat started trembling. The lion was ready to savour the rat. The rat begged the lion to pardon and promised to help him in the hours of need. At that time, the arrogant lion smugged at the rat and left it alive. After some days, the lion was trapped by hunter in the net. The lion began to roar for help. Soon the rat came with fellow friends and saved the life of lion. And then they were friends forever. The moral of the story is - One never knows how one can be helpful to others. (Word count 144)

The story is written with simple vocabulary. The sentence structure is also very simple. The connectors are not used effectively. A few punctuation errors can be identified. Some sentences begins with conjunctions (i.e.

'And'). It should have been avoided.

Group 2:
Once upon a time, in a thick and dreadful forest, a lion was sleeping beneath the tree. Suddenly, a cheerful rat came to play for a while. There he saw a lion. Unknown to the dangers of lion, he climbed over the body of the lion and started playing with his whiskers. Suddenly, the lion woke up and roared in anger. The rat was trembling in fear. Watching a trembling rat, the lion pitied him. The rat was ashamed for his deed and begged to be pardoned. He also promised the lion that he would help him in his critical times. The lion, in a mood of disgust smugged at rat and left him alive. Then, one day a group of hunters trapped the lion in a net. A poor lion roared for help. As soon as the rat came to know about the trapping of lion, he came with a few friends and cut the net. In this way, he saved the lion. After that incident, they remained friends forever.

THE MORAL OF THE STORY:

1. A friend in need is a friend indeed.
2. Never underestimate anyone in your life because you never know how one can be helpful to others.
3. Friendship is like water, noshape, noplace, notaste. But it is still essential for living. (Word count 221)

This story is written with richness in vocabulary in form of adjectives like 'thick and dreadful forest', 'cheerful rat', 'trapping' etc. There is a mixture of a few complex and compound sentences with by and large simple sentences in this writing.

In this writing, we found several typos. Here, the corrected version of the story is presented. The original with errors in space, capitalization and punctuation can be read on the blog. (Barad, Story Writing).

Group 3:
The arrogant Lion was sleeping beneath a barren tree and his arrogance, too, was, adding even bitter barrenness to the nature by making it dismal and gloomy. In such atmosphere, small, innocent infant Rat came in a jovial mood. Being in jovial mood infant started playing with the lion by climbing over the body of the lion without knowing the danger in it. In his pleasing mood, the rat continued to play with whiskers of the lion. On such pleasing atmosphere where tree forgot to blossom, wind forgot to blow, they got their charm and sense of being a part of nature. But before such happened the lion woke up and roared angrily. Everything became barren as it was

before. The rat got trembled. In his fury, the lion was ready to savour the rat. The rat, innocent and small creature succumbed and begged to be pardoned. This small creature assured him to help in the hours of need in the best possible way he 'CAN'. But, how can a small creature help 'A KING'? The king smugged the rat and gave him a chance to live. The flow of time never remains the same. After few days, the king was trapped by hunters in the net. It was so called pity of him. He craved and roared for help. The rat, being a being of blood and flesh, without thinking anything came with fellow friends and anyhow managed to save the King by cutting the stings of the net. Only afterwards, the lion understood the value of friendship and became the friends forever. (Word count 263)

In this story, we find better vocabulary than the previous two versions. For instance, the adjectives and adverbs like 'arrogant, barren, bitter barrenness, dismal and gloomy, blood and flesh, etc. The sentence structure is quite rich with connectors like 'being in …..'.

If we compare these three stories, we find that all three of them have distinct style. The level of language and the complexity of sentence structure increases as we move from first to the third one. All three stories have a distinct mark of various styles. We can see how the image of a well-known fable can lead to the generation of language in variety of ways. None of the stories are untrue, yet all of them have different language to tell the same story. If one group has said it in 144 words, the other said it in 221 words, the third one in 261 words. If the previous stories were written with simple expressions, this has more of literariness in its writing style. The prose of first story seems lifeless (not in negative sense). It is short and simple but it lacks energy. It does not engage the reader with the story. It may be because it does not make use of action verbs or adjectives or adverbs. The phrase like 'rat came to play' is more vague expression. If this vague expression is questioned 'how', it helps energizing the prose. The third story mentions same as 'Rat came in a jovial mood'. The third story makes use of some lovely adjectives. The adjectives like 'arrogant', 'barren', 'dismal and gloomy', 'innocent' etc helps in creating a beautiful word picture. The lack or minimal use of adjectives in first two writings makes the prose look languid and listless. The third story creates the picture of exactly what is going on. It supports the idea of 'creation', which is the ultimate goal of learning as per Bloom's taxonomy, which identifies creativity as - “It builds a structure or pattern from diverse elements. Put parts together to form a whole, with emphasis on creating a new meaning or structure.” (Bloom). The third story with the use of adjectives and adverbs gives a sense, adds strength to sentences. It creates word picture. The details engage the reader. The liveliness, which leads to better engagement of reader, increases in each of the three stories. The gradual growth of the prose from short and simple (which is also quite beautifully written story) to more engaging, lively, energetic prose is worth taking note in this experiment. All the three groups created the stories, which are very significant examples.

The self-evaluation by the learners can help them to understand where they stand in the proficiency of writing skills. The teacher's role as an evaluator is minimized. There is self-learning on the part of learners through this mode of teaching writing skills. It was observed by the teacher than the learners are not using connectors like 'however, nevertheless, in whatever way, although, nonetheless etc. There is more use of 'and' and 'but' which also tells about the learner that they are at intermediate level in learning English as a second language. With reference to CEFR (Wikipedia, Common European Framework of Reference for Languages), we may infer from the writing skills of the above groups that they fall under following categories:

GROUPS	CEFR	DESCRIPTION
Group 1	A2 – Waystage to elementary	Can understand sentences and frequently used expressions related to areas of most immediate relevance (e.g. very basic personal and family information, shopping, local geography, employment). Can communicate in simple and routine tasks requiring a simple and direct exchange of information on familiar and routine matters. Can describe in simple terms aspects of his/her background, immediate environment and matters in areas of immediate need.
Group 2	B1 Threshold to intermediate	Can understand the main points of clear standard input on familiar matters regularly encountered in work, school, leisure, etc. Can deal with most situations likely to arise while travelling in an area where the language is spoken. Can produce simple connected text on topics that are familiar or of personal interest. Can describe experiences and events, dreams, hopes and ambitions and briefly give reasons and explanations for opinions and plans.
Group 2	B1 Threshold to intermediate	Can understand the main ideas of complex text on both concrete and abstract topics, including technical discussions in his/her field of specialisation. Can interact with a degree of fluency and spontaneity that makes regular interaction with native speakers quite possible without strain for either party. Can produce clear, detailed text on a wide range of subjects and explain a viewpoint on a topical issue giving the advantages and disadvantages of various options.

[Caption: Table1: Based on The Common European Framework of Reference for Languages] (Wikipedia, Common European Framework of Reference for Languages)

It is worth noting that none of the students who worked in these groups was able to secure C1 or C2 in the CEFR exam in the following month of this experiment. The members of group 3 were able to reach B2, which was the highest.

Conclusion

Thus to conclude, we can say that using various tools and techniques which modern technology gives us an opportunity to explore incredible possibilities and can make a big difference in the learning of writing skills. It is not to say that the traditional classroom methods should be scrapped off. It is not to prove that technology is panacea. It is not to say that technology will replace traditional pedagogy and will reinvent new one. Nevertheless, time demands to synergize the traditional approach with the modern technology. In this experiment, we have successfully synergized traditional techniques like communicative language teaching, cooperative learning, alternative assessment, classroom management, activating material, story writing etc with the technology like blog. This experiment yields wonderful results when all the traditional classroom techniques were performed in language lab over the internet-connected devices. Only one web tool i.e. blog was used to converge with traditional techniques. However, the openness of the blog, the ability of the blog to go out of the classroom, the potential of blog to reach beyond the limited frontiers of the classroom, the level of transparency it offers, the capacity of cooperative learning it offers and above all its accessibility (anywhere, anytime, anybody), when synergized with traditional pedagogy, the results are incredible. The learning happens. The teacher, now, no need to be the *sage on the stage*; s/he can better be a *guide by the side*.

References

Barad, D. P. (2009). Experimenting ICT in Teaching English Language and Literature. AsiaCall Online Journal , 4 (1), 47-57.

Barad, D. P. (2009). Pedagogical Issues Related to Speaking and Listening Skills & Sound Editing. ELT Weekly , 1 (27), 39-47.

Barad, D. P. (2009, Aug 4). Story Writing. Retrieved June 4, 2014, from Blog 4 Teaching & Learing: http://b4tl.blogspot.in/2009/08/story-writing.html

Bloom, B. S. (1956). Taxonomy of Educational Objectives, Handbook I: The Cognitive Domain. New York: David McKay Co Inc.

Brumfit, C. J., & Johnson, K. (1979). The communicative approach to language teaching. Oxford: OUP.

Cortazzi, M. (1994). Narrative Analysis. Language Teacher , 157-70.

Gaith, G. (2004). Using Cooperative Leanring to Facilitate Alternative Assessment. English Teaching Forum , 26-31.

Ho, P. V., & Ushaha, S. (2009). Blog-Based Peer Response for EFL Writing: A Case Study in Vietnam. AsiaCall Online Journal , 4 (1), 1-29.

Hourigan, T., & Murray, L. (2010). Using blogs to help language students to develop reflective learning strategies: Towards a pedagogical framework. Australasian Journal of Educational Technology , 2 (26), 209-225.

Kagan, S., & Kagan, M. (2009). Kagan Cooperative Learning. CA: Kagan.

Mixon, M., & Temu, P. (2006). First Road to Learning:Language through Stories. English Teaching Forum , 14-32.

Morgan, J., & Rinvolucri, M. (1992). Once upon a time: Using stories in the language classroom. Cambridge: CUP.

Rhoades, G. (2013). Minimizing Chaos through Cooeprative Classroom Management. English Teaching Forum (4), 28-34.

Richards, J. C., & Bohlke, D. (2011). Creating Effective Language Lessons. Cambridge: CUP.

Richardson, W. (2010). Blogs, Wikis, Podcasts, and Other Powerful Web Tools for Classrooms (3rd ed.). USA: Sage.

Rosenerg, R. (2009). Tools for Activating Materials and Tasks in the English Language Class. English Teachign Forum , 1-27.

Sulich, M. (2004). Keeping Discipline in the Classroom. English Teaching Forum , 32-35.

Wikipedia. (2014, Jun 4). Common European Framework of Reference for Languages. Retrieved Jun 5, 2014, from Wikipedia, The Free Encyclopedia.: https://en.wikipedia.org/wiki/Common_European_Framework_of_Reference_forLanguages

Wikipedia. (2014, Jan 26). The Lion and the Mouse. Retrieved June 4, 2014, from Wikipedia, The Free Encyclopedia:

https://en.wikipedia.org/wiki/The_Lion_and_the_Mouse

Zhang, D. (2009). The Application of Blog in English Writing. Journal of Cambridge Studies , 4 (1), 64-72.

Zipes, J. (1995). Creative Storytelling. New York: Routledge.

International Journal of Humanities in Technical Education
Volume 1 | Issue 1 | January, 2015

Reading Skills: Is it Required for Technical Education?

Atanu Bhattacharya[10]

Introduction

Reading is the act of processing a written text for the purposes of comprehension. As we examine this definition closely, we realize that one needs to define the *principles* involved in this 'act', the *skills* and *strategies* required in the 'process' and the complex correlation of 'text' and 'comprehension'. Nuttall (1996), for example, defines reading as a decoding process for the purposes of extraction of meaning from written texts. Widdowson (1979: 54) defines it as 'the process of getting linguistic information via print'. The aim of this paper is to trace the theoretical underpinnings of the various models of reading—bottom-up, top-down and interactive compensatory—and how the latter builds upon the earlier models. It is only through an understanding of reading as process and product that the implications for practice may be discussed in terms of technical education. The paper therefore proceeds to examine the influence of the interactive-compensatory model in the actual constitution of texts. Finally, some sample texts are examined to estimate the impact of the model on materials production.

Models of Reading

In some accounts of reading, the text and parts of the text are prioritised with a view to study the relationships between form and meaning. Specific textual features are focussed on to identify particular reading skills. These may include phonemic awareness, for example, how 'phoneme-identification abilities' could be integrated within a theory of reading (Byrne and Fielding-Barnsley 1989), or how grammatical class of words or semantic field may be deduced from systematic visual patterning rather than from symbol-sound relationships (Stubbs 1980). The term 'bottom-up' has often been used for product approaches to reading since they` emphasize text-based features at word and sentence level. In these models the focus is on what the reader had extracted from the text rather than how the reader arrives at a particular interpretation (Wallace 1992). For instance, in Gough's (1972) model, letters are seen as the starting point of the reading process. They are recognized by a *Scanner* and then passed on to a *Decoder* which carries out a phonemic decoding transforming them into systematic phoneme strings. These strings are then fed into a *Librarian*, containing a *Lexicon* leading to the recognition of the word. The reader then proceeds to fixate on the next word till all the words are processed in a given sentence and then processed through a *Merlin* where syntactico-semantic rules operate to create meaning. The final stage of the model involves actual vocalization of the accessed print. In other words, Gough's model perceives the reading process as linear and unidirectional necessitating a sequential decoding technique moving from one level of micro-processing to another. The model envisages reading as a process that begins with the smallest unit and ends with larger units of meaning (Paran, 1997).

---

[10] Associate Professor, School of Language, Literature and Culture Studies, Central University, Gandhinagar - Gujarat

Research however, showed that the straightforward, sequential bottom-up approach does not bear itself out in actual practice. For example, Lunzner and Gardner (1979) failed to establish in their experiments that the progress that Gough outlined could be seen as clearly demarcated stages. It was further arguable whether one skill builds on another, or is involved in simultaneous processes. Further, it is also unclear whether the sequence of skills is acquired in advance or as a result of the graphic system of English (Olson 1990). As Rayner and Pollatsek (1989) concur, the bottom-up approach is too explicit to withstand testing at several points. Urquhart and Weir (1998) point out that the grammatical processing by L2 learners takes a more complex form than can be explained by recourse to bottom-up approach.

Opposed to bottom-up approach is what is referred to as the 'top-down' model, which is concerned with the strategies or resources that readers bring to the reading process. However, as Urquhart and Weir (1998) point out that the label is misleading and does not provide a neat converse to 'bottom-up'. Major figures in this tradition are Goodman (1967) and Smith (1971). Goodman characterized reading as a 'psycholinguistic guessing game', a kind of hypothesis verification whereby readers are able to make informed predictions as they process the text. Goodman's model is based on cue systems represented by three levels of language within the text that he terms graphophonic, syntactic and semantic. The first deals with the recognition of visual and phonetic features of written English, a process that involves textual scanning and then fixating on a word. It may also involve morphophonemic features (see Alderson and Urquhart 1984). The processing at syntactic level involves knowledge of syntactic constraints that apply to English, and the third on semantic possibilities based on collocational values and meaning of words. What Goodman proposed was the knowledge that readers use to reduce redundant features of the text (including 'miscues') to make significant guesses to create meaning. The model was based on choices that a reader makes between partly what he sees and what he expected to see, and then confirming his hypothesis. The model, therefore, was non-linear in nature being 'reader-driven' rather than 'text-driven.'

Frank Smith (1971) stressed the process through which readers chart a path through a text describing it as a 'reduction of uncertainty'. The idea was that as a reader progresses through the text, the lexical, syntactic, and semantic factors constrain the possible choices that he or she can make. The point that Smith made was that the constraints operate not only at the textual level but also at the level of background knowledge and schema. Though the actual theorization of schema came later, what Goodman and Smith were obviously referring to was what Coady (1979) would later designate as 'Background Knowledge' and Bernhardt (1991) 'World Knowledge'. Top-down theorists proposed a concept of the reader who encodes his own epistemological and ontological categories on the text.

The top-down approach had a considerable influence in preparation of ELT textbooks both in L1and L2. Bernhardt (1991) in a survey of reading models showed that 66.4 per cent were dependent on the models of Goodman or Smith. However, the model has problems. Firstly, one is not clear how much is dependent on cues (or miscues) and how much on actual textual signals. Secondly, the model is good in explaining the filling of gaps in the process but not how this gap-filling is done with actual textual inputs. Thirdly, experiments have shown that the claims of Goodman and Smith cannot be verified since reading as a process is seen as heavily text-bound and texts are sampled is a fairly dense manner. (Mitchell and green 1978; Mitchell 1984); Stanovich 1980; Oakhill and Garnham 1988: Rayner and Pollatsek 1989. In Paran 1996). Fourthly, it was realized that a good model of reading could not rely on entirely top-down approaches since the actual reading process does involve a fair share of bottom-up processes too. It thus led to a reworking of the model giving rise to the 'interactive-compensatory model', an intuitively appealing one since it combined elements from both the earlier mentioned models.

The 'interactive-compensatory model' proposed by Stanovich (1980) is based on the interaction of what he terms 'automatic activation' process and a 'conscious attention' mechanism. In other words, since the reader brings a whole epistemological framework to a text, there are certain processes of automaticity that get activated; on the other hand, since the textual inputs are essential for any form of processing the text, the constituent textual units need a conscious decoding apparatus. Stanovich further held that a weakness in one area of knowledge, for example, lexical knowledge, may be compensated by strength in another area, like orthographic knowledge. The model stressed that the lower level processes including lexical decoding, syntactic parsing, semantic appropriation and working memory activation bore an interactive relation with higher level processes like genre activation, contextual interpretation, schema generation, and inferencing. If the interaction led to failure at one point, then it was compensated by activation of other modes of processing. Thus, while the bottom-up approach was strictly linear and the top-down horizontal, the interactive-compensatory model acted at both a syntagmatic and paradigmatic levels of textual processing.

One of the important contributions of interactive models is that they have brought the text back into focus. Research in the area now concentrates on not only on activation of schemata as posited by top-down approaches, but also adequately on the textual factors that operate in the reading process. As Paran (1996) suggest that there is a need for reading teachers to 'hold in the bottom' on the grounds that top-down orientation leads to a neglect of the language data that the necessarily depends on. Secondly, a harmonious fusing of microskills and cognitive and metacognitive strategies is being sought particularly in the field of L2 research. The focus is not only limited to strategies at a top-down level but also to adequate development of language skills for the L2 learners. Thirdly, a more integrated approach is being sought for developing interaction between background knowledge and the constituent units of texts at the phonemic, lexical, syntactic, semantic and critical levels. This has led to a development of 'pre-reading', 'while-reading' and 'post-reading' tasks that facilitate a reader's interaction with the text and provides orientation to content and context (see Wallace 1992: 86-102). Carrell et al (1998) demonstrate how brainstorming, semantic mapping, true-false or agree-disagree tasks have become a core of reading tasks in most curriculum. There is a renewed focus, primarily due to L2 reading research, on not only the cognitive but also the cultural contexts and purposes of texts. Fourthly, there is an emphasis on extensive reading for vocabulary acquisition (Nuttall 1996) that enables the L2 reader to cope with the semantic density of texts. Finally, extensive research in both L1 and L2 reading skills are being carried out with varying degrees of success to understand both the 'interactive' and 'compensatory' aspects of the reading process. In other words, both bottom-up and top-down.

Implications for Design of Materials

What then are the implications for the interactive-compensatory model for design of classroom materials, especially in the field of technical education? One of the problems that one immediately faces is the open-ended nature of the model that can lead to an unending variety of interactive bottom-up and interactive top-down models. Material designers are therefore presented with an infinite variety of choices and research is not yet conclusive. Secondly, as the model is extended to L2 reading, we are faced with, what Grabe and Stoller (2002) call, the 'dilemmas for L2 reading research and instruction'. Some of them may include areas like differing contexts, socio-cultural situations, cultural socialization, vocabulary recognition, fluency practice, text structure and discourse organization, skills and strategies development, integrating language skills, motivation—areas that may extend beyond the scope of the model itself. Finally subsequent developments in fields of genre analysis and critical discourse analysis have laid the field open to further refinement of the model.

The model was subsequently refined and made more inclusive in subsequent years by Stanovich (1986, 2000) himself and other writers (See Gascoigne 2005). In terms of material design, it has led to a number of changes from the strictly bottom-up or top-down approaches of reading:

- there is a renewed emphasis on graphophonic features and automaticity;
- from a mere set of 'search reading' questions at the end of the text, there has been a shift to learning of textual and discourse features of the text;
- there has been a breaking down, staging or scaffolding of the text so that the less able reader is taken into consideration;
- there has been a gradual shift from processes involved in reading (cognitive strategies) to reflective reading or metacognitive strategies;
- there has been an integration of pre-reading activities (previewing, predicting), while reading strategies (self-questioning, self-monitoring), and post-reading ones (evaluation);
- an adequate focus on text selection—not necessarily an outcome of the model but related to it—has been considered significant since texts are seen as the source of lexical and syntactic

learning;

- there has been an attempt to create, what Cope and Kalantzis (2000) call 'critical framing' of texts where readers are encouraged to consider the underpinnings of cultural contexts and purposes of texts;
- focus has shifted from teaching reading to a more integrated skills approach involving interaction with other skills.

What then is required for technical education?

Graphophonic Features and Vocabulary Guessing

The texts selected for technical education would do well if the focus is on vocabulary exercises which do not simply ask students to locate words in a text and find their meanings, but gives contextual cues so that the reader may use those to locate the words. It also could have certain exercises on phrases and active vocabulary building. Though not in fashion any more, including 'reading aloud' as a part of the vocabulary exercise to emphasise the graphophonemic features of the text, is an approach that could be thought about. There should be evidence of bottom-up processes but this cannot be a strictly linear approach since a lot of interactive strategies need to be adopted to ensure learners' engagement.

Discourse Features

A focus on discourse features is essential in technical education since these features determine not only the level of the text but also the genre to which it belongs. The teaching point is to be implicit and may not use the grammatical label though in effect should intend to teach referencing or other discourse markers. Though, I have identified discourse feature as a unit of bottom-up process, it must be remembered that in technical education that the focus is not on individual identification of these features but how they exist interactively within the space of the text.

Scaffolding

I have marked this as a compensatory technique. The most common scaffolding technique used in today's digital world is the extensive use of audio-visual aids to help the less able reader. The reading text could be staged in such a way so as to break up the text resulting in only small amounts of information being processed at a time. These distinct stages then could be supplemented by audio, video and other digitally (and often freely) accessible materials The scaffolding used in the texts may be seen both as a part of bottom-up processes as well as compensatory strategies to help a less fluent reader to cope with the text.

Pre-reading, While-reading and Post-reading

The most important aspect that may not be essentially neglected in technical texts is the use of activities that precede the reading of the text, those which are simultaneous with it and those which follow it. This is direct fallout of the interactive-compensatory approach. The need is felt to prime the readers with new knowledge or prompt the reader to recover existing knowledge in advance, and then to make maximum use of cognitive and linguistic resources during text processing (Kress 1985). The texts should ideally trigger-off contextual or schematic knowledge through the pre-reading, encourages self-monitoring in the while-reading, and asks for evaluation and personal responses in the post-reading.

Integrated Skills

I am including this as an important aspect of design since the integration of skills may be seen as an interactive-compensatory strategy. A weakness in one skill may be compensated for by another and therefore important for pedagogic purposes. The texts must correlate and combine more than one skill. In the context of Gujarat, there has been a recent shift in focus from structural syllabuses to function-based ones. It was also decided by the Higher Secondary Textbook Board of Gujarat, that English textbooks need to move away from the rigidly 'comprehension question' approach to a more 'integrated skills approach'. This led to a production of textbooks that had pre-reading tasks, comprehension tasks, vocabulary recognition tasks, fluency tasks and writing tasks. While these shifts have occurred at the school education level, unfortunately, similar changes on a large-scale are still desired at the tertiary level.

Conclusion

This paper has examined the major models of reading and how from an oppositional position of 'bottom-up' against 'top-down', they have reached a compromise in the interactive-compensatory model of Stanovich. It has also investigated the implications of the model in the design of classroom materials for technical education. The analysis however, shows that a single model may not be sufficient for exploiting the complex process of reading. Therefore, a rapprochement between opposing camps for a more integrated approach may be opted for in the teaching of reading. As Urquhart and Weir (1998: 295) put it: 'What is clear, however, is that the more rigorous and comprehensive we can be in our investigations, the clearer the account that is likely to emerge of the nature of reading.' In other words, for technical education especially, reading as *process* may be broadened to include attention to ideological and cognitive aspects, while reading as *product* needs to absorb judicious teaching of text-based features. Only then can reading be both interactive *and* compensatory.

References

Alderson, C. and Urquhart, A (eds). 1984. *Reading in a Foreign Language*. London: Longman.

Bernhardt, E.B. 1991. *Reading Development in a Second Language: Theoretical, Empirical and Classroom Perspectives*. Norwood, N.J: Ablex.

Byrne, B. and Fielding-Barnsley, R. 1989. 'Evaluation of a Program to Teach Phonemic Awareness to Young Children'. *Journal of Education Psychology*, 83: 451-5.

Carrell, P., Devine, J., and Eskey, D. (eds). 1988. *Interactive Approaches to Second Language Reading*. Cambridge: Cambridge University Press.

Coady, J. 1979. 'A Psycholinguistic Model of the ESL Reader'. In Mackay, R., Barhman, B. and Jordan, R.R. (eds) *Reading in a Second Language*. Rowley, Mass.: Newbury

House.Gascoigne, C. 2005. 'Toward an Understanding of the Relationship Between L2 Reading Comprehension and Grammatical Competence'. *The Reading Matrix*, Vol.5, No.2: 1-13.

Goodman, K. 1967. 'Reading: a Psycholinguistic Guessing Game'. *Journal of the Reading Specialist*, 6: 126-35.

Gough, P.B. 1972. 'One Second of Reading'. In Kavanagh, F.J. and Mattingly, G. (eds) *Language by Ear and by Eye*. Cambridge, MA: MIT Press.
Grabe, W. and Stoller, F. 2002. *Teaching and Researching Reading*. London: Longman.

Kress, G. 1985. *Linguistic Processes in Sociocultural Practice*. Oxford: Oxford University Press.

Lunzner, E. and Gardner, K (eds). 1979. *The Effective Use of Reading*. London: Heinemann.

Nuttall, C.1996. *Teaching Reading Skills in a Foreign Language* (new edn.). London: Heinemann Educational

Olson, D. 1990. 'When a Learner Attempts to Become Literate in a Second Language, What is He or She Attempting?'. *TESL Journal 20 (1)*: 18-22.

Paran, A. 1992. 'Bottom-up and Top-down Processing'. *English Teaching Professional*, 3: 32-4.

Paran, A. 1996. 'Reading in EFL: Facts and Fictions. *ELT Journal* 50 (1): 25-34.
Rayner, K. and Pollatsek, A. 1989. *The Psychology of Reading*. Englewood Cliffs, N.J.: Prentice Hall.

Smith, F. 1971. *Understanding Reading: a Psycholinguistic Analysis of Reading and Learning to Read*. Orlando, Fla.: Holt, Reinhart, and Winston.

Stanovich, K. E. 1980. 'Toward an Interactive-compensatory Model of Individual Differences in the Development of Reading Fluency'. *Reading Research Quarterly*, 16: 32-71.

Stubbs, M. 1980. *Language and Literacy: The Sociolinguistics of Reading and Writing*. London: Routledge and Kegan Paul.

Urquhart, S. and Weir C. 1998. *Reading in a Second Language: Process, Product and Practice*. London and New York: Longman.
Wallace, C. 1992. *Reading*. Oxford: Oxford University Press.

Widdowson, H. G. 1979. *Explorations in Applied Linguistics*. Oxford: Oxford University Press.

Widdowson, H. G. 1983. *Learning Purpose and Language Use*. Oxford: Oxford University Press.

International Journal of Humanities in Technical Education
Volume 1 | Issue 1 | January, 2015

Effectiveness of the Formative Assessments to Develop Communicative Competence

S. M. Gohil[11] & **Sharon Patel**[12]

Introduction

Assessment and evaluation have become buzz words in the educational set up of India and particularly of Gujarat. As everywhere else, assessment in education in India refers to collecting information on the progress of learners' learning using a variety of procedures, and evaluation refers to making judgments on the basis of the information collected. Teaching for successful learning cannot occur without high quality assessment. Assessment, therefore, needs to be integrated with the process of teaching and learning. According to Brown (2004), assessment is an important part of teaching and learning, and assessment is more than just testing. The below given diagram adapted from Brown (2004) supports the argument.

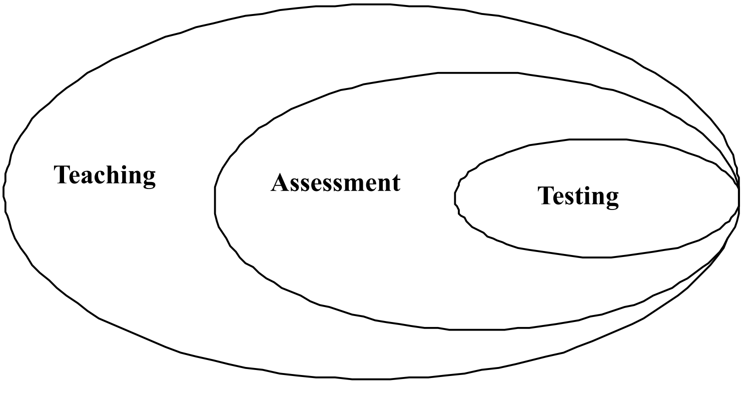

---

[11] Assistant Professor, Department of English, NMCA, NAU, Navsari, Gujarat, India.
[12] Research Scholar, H M Patel Institute of English Training and Research, Vallabh Vidyanagar, Gujarat, India

Assessment is directly related to testing teaching and learning and should go hand in hand with them. We do not assess students just to promote to the next grade. Instead, there are many reasons behind that. Some of the reasons we assess our learners are:

To make decisions:

- to place students in a course,
- to admit students to a program,
- to decide what to teach,
- to decide what needs to be reviewed.

To monitor students' performance and achievements, their strengths and areas to improve.

To monitor our own effectiveness as teachers.

To report students' grades and progress.

Thus, assessment plays an important role in the education process but in the present context, assessment has become synonymous to testing. Teaching and testing have become two independent processes of the education system. According to Cameron (2001), assessment motivates the learners. It helps the teacher plan more effectively and informs the improvement of the instructional programme. Assessment must be congruent with learning and must include a variety of techniques. Feedback is an important aspect and it supports further learning.

Rationale

The education department of the Government of Gujarat, recognizing the above mentioned importance of the assessment process, introduced formative assessments at the secondary school level. The objective was to encourage alternative assessment techniques and make testing stress free and interesting. It was also as part of introduction of Continuous Comprehensive Assessment.

The decision also applied to language testing which always faces a challenge of keeping near the real life language use needs of the students. In communicative language teaching, the assessment should reflect real language use as much as possible. The diagram given below shows assessment in Communicative Language Teaching.

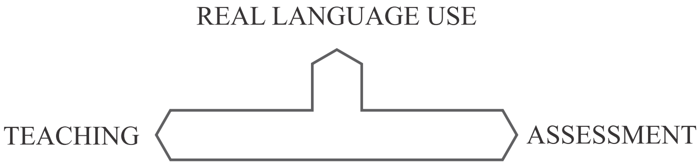

To Black & Wiliam (1998) assessment broadly includes all activities that teachers and students undertake to get information that can be used diagnostically to alter teaching and learning. Under this definition, assessment encompasses teacher observation, classroom discussion, and analysis of student work, including homework and tests. Assessments become formative when the information is used to adapt teaching and learning to meet student needs. When teachers know how students are progressing and where they are having trouble, they can use this information to make necessary instructional adjustments, such as re-teaching, trying alternative instructional approaches, or offering more opportunities for practice. These activities can lead to improved student success (Sawyer, Graham, & Harris, 1992).

Thus, this study was intended to arrive at clear understanding of the role of assessment process in language learning and to try out the newly introduced formative assessments to arrive at some conclusion in English Language Teaching assessment based on empirical data.

The Experiment

The experimental study was carried out by preparing a 30 hour language instruction programme with formative assessments as an integral part of the transaction process and involving different testing techniques. The students were given intensive feedback on their formative assessments and decisions regarding teaching were made based on the students' performance.

The study was carried out using single group pre-test>treatment>post-test experimental design. The population for the study was vernacular medium (GSEB) students of 9th standard and the sample was an intact group from a school of Ankleshwar, Gujarat. An intact group allows the researcher to give evidence in support of links between variables if not cause effect relation statements about findings (Hatch and Lazarton, 1991).

The study was guided by the following directional and null hypothesis.

i. There will be a significant difference in the overall mean scores of the pre- test and the post-test.

ii. There will be no significant difference in the mean scores of the pre-test and the post-test with respect to Vocabulary, Grammar, Reading and Writing Skills.

The pre-test and the post-test were major data collection instruments. The tests and the programme included Reading, Writing, Vocabulary and Communicative Grammar as language skills. The programme also involved speaking but it was not tested to delimit the study. The writing part was assessed with a well defined set of rubrics. In addition to the rubrics for the tests, each descriptive formative assessment had well defined rubrics which were shared with the students to make them responsible and sincere learners. The tests and the programme were given to the ELT experts for their views and feedback as part of data validity measures.

Data Analysis and Interpretations

The data collected through the test scores were analysed used advanced statistical methods to test the hypothesis. Testing the first hypothesis, the T analysis of the overall mean scores of the test revealed the following.

Table showing difference in post-test and pre-test score.

	Paired Difference							
	Mean	Std. Deviation	Std. Error Mean	95% Confidence Interval of the Difference				
				Lower	Upper	T	df	Sig. (2-tailed)
Pair I Post-test score –Pre-test score	3.2571	3.1747	0.5366	-2.0000	10.0000	6.07	34	<.0001

The T-valued obtained from the analysis of the overall mean scores of the pre-test and post-test is 6.07. The mean of the paired difference was 3.2571 with standard deviation 3.1747. The P-value or value of significance was <.0001, at the level of 0.05. The analysis revealed that there was a significant difference between overall mean scores of the pre-test and post-test at 5% level of significance. Therefore, the hypothesis, **There will be significance difference in the mean scores of the pre-test and post-test of the students** is accepted**.** The significance at 5% level suggested that the difference in the mean scores of the pre-test and post-test was due to the effect of the treatment, not due to chance.

To test the second hypothesis, T- analysis was carried out for each skill. The analysis revealed that the formative assessment could bring significant difference in the score of the pre and post test for reading, writing and grammar. There was no significant difference found in vocabulary of pre and the post test.

Major Findings

Thus, it could be concluded that formative assessments can improve communicative competence of vernacular medium secondary level students as reading, writing, grammar including overall scores have shown significant improvement in the post test. The learners' feedback also revealed that they enjoyed testing with different techniques and with the knowledge of what is expected through rubrics sharing. It can also be concluded that vocabulary needs more practice in the tried out programme.

Conclusion

The formative assessment is a very good way of testing Communicative English. The rubrics make the assessment more systematic and it also make the learners responsible without added stress. As assessment is a continuous process and done using alternative techniques, it becomes an integral part of the teaching - learning process as expected. The study has been tried out only in one region of the Gujarat state and requires further investigation in different regions with different students. It is also recommended that listening and speaking may be added for further research.

References

Black, P. (1998). *Inside the black box: Raising Standards through Classroom Assessment*. Retrieved from http://www.pdkintl.org/kappan/kbla9810.htm

Brown, H. D. (2004). *Language Assessment*. White Plains, NY: Longman.

Cameron, L. (2001). *Teaching Languages to Young Learners*. Cambridge, UK: Cambridge University Press.

Hatch, E. & Lazaraton, A. (1991). *The research manual: Design and Statistics for Applied Linguistics.* Boston: Heinle & Heinle.

International Journal of Humanities in Technical Education
Volume 1 | Issue 1 | January, 2015

Communication Skills for Engineering Professionals

Sangeeta Sharma[13] **& Poonam Vyas**[14]

Introduction

There is substantial consensus on the importance of communication skills in the academic world. Virtually, every college's or university's mission statement makes the development of communication skills a central educational goal. There is also widespread acknowledgment of the vital importance of communication in the personal, professional and civic lives of graduates. For decades, the literature of our profession has addressed the essential role of communication in any liberal education and provided documentation of the effectiveness of basic communication courses. The *New York Times* columnist and best-selling author, Thomas Friedman (2006), talks about what college graduates need to know and be able to do in order to be successful in the 21st century:

> You need to like people. You need to be good at managing or interacting with other people. Although having good people skills has always been an asset in the working world, it will be even more so in a flat world [advances in technology and communication putting diverse people in touch as never before]. That said, I am not sure how you teach that as part of a classroom curriculum, but someone had better figure it out. (p. 106)

Technical communication is very important for practical applications of science, for learning the mechanics in technology, for promoting technological research, and for the training of technologists. The primary training and interests of engineering students lie in technical areas. Most of the engineering students successfully pursue their technical subjects but without extra communication courses. After their studies, engineers and scientists in government and industry, they work on technical projects. It might seem they pursue and practice well and that writing and communication are superfluous to a technical education. In fact, this is not the case. Scientists and engineers may be technically brilliant and creative, but unless they can convince co-workers of their worth, the technical skills will be unobserved, unrewarding, and unused. Felder et al. (2000) reported that engineering leaders ranked communication skills to be more important than technical skills. A study by Darling and Dannels (2003) reported that the types of communication that engineers rated as most important included message construction skills, teamwork, negotiation, and asking and responding to questions.

---

[13] Associate Professor, Department of Humanities and Social Sciences, BITS, Pilani, Rajasthan.
[14] Faculty, Malaviya National Institute of Technology, Jaipur, Rajasthan.

As such, it is vital to get the right mix of skills that are required by industry. The current mix evidenced by students' skills does not seem to fit directly with industry requirements; at the very least, competent engineers with excellent grades have difficulty in presenting themselves and their achievements in interview.

To solve this problem, communication competences being taught and those in demand should be compared and based on that curriculum should be designed which can fulfil the demand of the industry. Keeping in mind the present academic scenario, this study provides a rationale for the claim that communication skills are the omphalus of the curriculum of Technical Education. This paper first discuses the relevance of communication skills in general and then specifically in context of technical education and finally suggest some areas related to communication skills which can be integrated while designing the curriculum of technical education in India to meet the expectation of the employers.

Communication Skills: A Must for Self-Development

A communication skill is vital to the self -development of a person. Educators and researchers within and outside the discipline attested to the role of communication in self-development. As a discipline which enhances relationships with one's self, others, and society, communication is viewed as central to general education requirements. Communication should be included in early childhood education and should continue through adult education. Students recognize the importance of communication education, but may underestimate the importance of some skills. Communication education improves specific skills and abilities including critical thinking, media literacy and criticism, leadership skills, and family relational development. Educators understand the importance of communication and that acquiring communication knowledge allows one to gain personal power.

Need of Professional Communication Courses in Technical Education

In the present scenario, professional certainly needs effective and impressive communication skills. The John J. Heldrich Center for Workforce Development (2000) conducted a national survey of American workers asking them what should be done to improve education. Of 1,015 adult workers, 87% rated communication skills as being very important and said that schools need to prepare people with skills and attitudes that are important to workplace success such as communication skills and critical thinking skills. There is a great need to frame course materials and develop methods and strategies to enhance LSRW (listening, Speaking, reading, Writing) skills of engineering graduates. By analyzing all these factors most of the Indian universities have developed and designed a course for engineers entitled as Technical communication in engineering education. The overall concept of Technical communication focuses the learner's attention on communication skills required in the engineering profession. For management students, a course entitled "Business communication" is being offered by most of the management institution in India. In fact, these communication courses are an integral part of all engineering and management curricula which complement technical and professional content by enabling students to appreciate the world in which they live and work, and to contribute as an educated member of society. These courses also provide a framework for rational inquiry, critical evaluation, judgment, and decisions when dealing with issues that are non-quantifiable, ambiguous, or controversial. Moreover, they offer opportunities for students to develop interests and insights that guide, enrich, and expand their perceptions of the world they live in. It is found that basically (engineering) professionals need communication skills for following reasons:

1. To express and share their experience, knowledge, ideas and thoughts in an effective manner for the common benefit of the society.
2. To aspire a bright academic career growth.
3. To secure a higher level of position in the related jobs.
4. To attain timely promotion and other benefits at their working place.
5. To lead the team from the front.
6. To develop a very healthy working environment and interpersonal communication skills.
7. To harness a better understanding and harmony.
8. To pursue advance or higher level of studies.
9. To work in a globalized and multilingual culture.
10. To sharpen presentation, writing, negotiation, intrapersonal skills etc.

Degree Programs in Professional Communication

Through degree programs in professional communication such as **Bachelor of Arts in Communication,** students examine the role of communication in all areas of life, including organizational communication, small-group communication, interpersonal communication and communication ethics, media, just to name a few. Students will learn the theory behind communication and its effective application in a dynamic environment.

Conclusion

In the globalize context, students of engineering and technology need communication skills for their success in education and career. Industries are also voicing their concerns about the need for better communication skills among students of engineering and technology. The professional profile of a modern qualified engineer should include well-developed communication skills and high English language proficiency to help him/her achieve success in the modern highly competitive global work arena. In fact professionals in all positions have to communicate the purpose and relevance of their work, both oral and written communication to get a good job. If one is clear in expressing one's thoughts and articulating ones accomplishments and attributes, an interviewer is more likely to form a favorable impression and gain an understanding of his/her skills. Viewing the soaring demand of communication skills in the corporate world, most of the Indian universities and colleges are offering communication course but their numbers are very less. Hence Indian graduates are facing the problem of un-employability even after having sound academic records. To overcome this problem proper market research should be done before designing the curriculum of these technical universities to meet the demand of the industry.

References

Patil Arun S., & Marc J. Riemer, “English and Communication Skills Curricula in Engineering and Technology Courses in the Indian State of Maharashtra: Issues and Recommendations”, *Global J. of Engng. Edu., Vol. 8, 2004.*

Morreale Sherwyn P., Michael M. O & Judy C. Pearson, "Why Communication is

Important: A Rationale for the Centrality of the Study of Communication" *Journal of the Association for Communication Administration* 29, 1-25, 2000.
Morreale Sherwyn P. & Judy C. Pearson, Why Communication Education is Important: The Centrality of the Discipline in the 21st Century Vol. 57, No. 2, , pp. 224_240, 2008.

Saravanan V., "Sustainable Employability Skills for Engineering Professionals", The Indian Review of World Literature in English, Vol. 5 No.II – July, 2009.

Emanuel Richard, "A Rationale for the Basic Course: Fundamentals of Oral Communication vs. Public Speaking", *Journal of Research and Practice, 29:153-162, 2005*.

Sévigny Alex , Terence Flynn, "A reflection on the evolution of the field of professional communication", *Journal of Professional Communication 1(1):3-14, 2011*

Sudarshan Mishra , "Developing E- learning Material: Some Pedagogical Concerns", *Indian Journals of open Learnin*g,Vol.17.pp.155-161,2008.

Friedman, T. L. The world is flat: A brief history of the twenty-first century. New York: Farrar, Straus and Giroux, 2006.

John J. Heldrich Center for Workforce Development & Center for Survey Research and Analysis. Making the grade?: What American workers think should be done to improve education (Heldrich Work Trends Survey, v.2.2), Rutgers, NJ & University of Connecticut. 2000.

Felder, R.M., Woods, D.R., Stice, J.E., & Rugarcia, A. The Future of Engineering Education II. Teaching Methods that work. *Chemical Engineering Education, 34(1),* 26–39, 2000.

Darling, A.L., & Dannels, D.P. Practicing Engineers Talk about the Importance of Talk: A Report on the Role of Oral Communication in the Workplace. *Communication Education, 52 (1),* 17-29 2003.

Call for Papers

'Teaching Writing Skills to Students of Technical Education'

Papers are invited for the July Issue of IJHTE as per the guidelines as follows:

- **Theoretical expositions:** papers based on relevant theories related to teaching writing skills.

- **Designing Curriculum on Writing Skills:** papers based on designing curriculum on writing skills in technical education highlighting problems and solutions of pedagogy.

- **Evaluating Writing Skills:** papers studying approaches, techniques and methods of evaluating writing skills of the students of technical education.

- **Action research and teacher reflections:** papers based on the classroom teaching or teacher's reflections of his/her teaching with respect to writing skills. These can be case studies of a particular experiment or innovation effectively implemented in the classroom.

- **Classroom practices:** papers which are directly useful for teachers in the classroom in terms of inputs for teaching particular skills/aspects of writing skills, lesson planning, assessment and evaluation and other related tasks for teaching writing skills.

- **Writing on Digital Platforms:** papers focusing on perspectives and insights on how to write well on digital platforms.

- **Book reviews:** review of recently published ELT books that are relevant for teachers of English, particularly in technical education. Reviews should consist of a brief introduction of the author and the relevance of the book along with a short summary of contents. It should also contain comments on its significance to the researchers and practitioners. Reviews should not exceed 1,500 words including references.

- **Format:** As per the author guidelines.

Kindly send your papers at: ijhte2014@gmail.com

The last date for sending papers is May 30, 2015.

Subscription Form

Subscriber Type and charges: Library/Institution-Rs. 750/-, Individual-Rs.500/-

Name:____
Affiliation:____
Department:____
Address:____
____
____
____
____
____

City/State/Zip____
Country:______________________________Fax______________________
Phone:_______________________________Signature___________________
Email:______________________________ Date___________________

Payment:

Cheque/DD is enclosed (Payable at Marwadi Universal Education Pvt. Ltd.)

DD No.:____________________ Date:___/___/_______
Drawn on Bank.:_____________________

HOW TO ORDER

There are two ways to place your order:

1. You can e-mail us your order at ijhte2014@gmail.com
2. You can order via regular mail, please complete Subscription Information and DD/cheque to:
   Marwadi Education Foundation's
   Group of Institutions,
   Gauridad - Rajkot - 360 005.

Note: All subscriptions are payable in advance and all rates include postage and taxes. Subscribers are requested to send payment with their order whenever possible. Issues will be sent on receipt of payment. Subscriptions are entered on an annual basis, i.e. January to December and are subject to renewal in subsequent years.

www.marwadieducation.edu.in

International Journal of Humanities in Technical Education
A Bi-annual Refereed Journal

International Journal of Humanities in Technical Education (IJHTE) seeks to facilitate the discourse over the fundamental issues of Humanities with respect to its role and space in technical education. The IJHTE would serve as the forum of technical education in India that provides defining insights pertaining to Humanities in Technical Education.

Areas:

The Journal focuses on the following areas:

- Teaching of Languages in Technical Education
- Teaching Humanities-related Courses to students of Technical Education
- English Language Teaching (ELT) in Technical Education
- Role of Humanities in Technical Education
- Integration of ICT in Teaching of Foreign Languages
- Employability Concerns and Role of Humanities
- Developing Teacher Competence of Language Faculty
- Translation Studies
- Media Studies and Language Studies
- Innovative Pedagogy and Language Studies

Technical Campus
Marwadi Education Foundation's Group of Institutions
Rajkot-Morbi Road, At & PO : Gauridad, Rajkot.
Tel. : +91-281- 2923112, 2924155 / 56
Mobile : +91 97277 24661 / 62 / 63 / 64 / 65/ 66
www.marwadieducation.edu.in | info@marwadieducation.edu.in

Corporate Office
Marwadi Education Foundation's Group of Institutions
'Marwadi Financial Plaza', Near Nana Mava Chowk, Off 150ft. Ring Road
Rajkot 360 005. Gujarat. India